INVITATION TO BID

ITB No. MC-2132

INSTALLATION OF NEW CRANE STOW PIN SOCKETS AT THE TALLEYRAND MARINE TERMINAL (TMT) (FOOT MARKER 1565 TO 1720)

ITB DUE DATE: WEDNESDAY, NOVEMBER 18, 2026, BY 2:00 PM (ET)

Elijah Wright, Sr. Contract Specialist
Elijah.Wright@JAXPORT.com

PROCUREMENT SERVICES
2831 Talleyrand Avenue, Jacksonville, Florida 32206

JAXPORT.com/procurement/active-solicitations

BID RELATED DOCUMENTS

FOR

INSTALLATION OF NEW CRANE STOW PIN SOCKETS AT TMT

Contract No.: MC-2132

TALLEYRAND MARINE TERMINAL

BID RELATED DOCUMENTS

INDEX

ITEM	PAGE NO(S).
INVITATION TO BID	ITB
BID CONTENTS AND FORMAT	BCF-1 TO BCF-2
"NO BID" RESPONSE	NB
SUPPLEMENTAL INSTRUCTIONS TO BIDDERS	SIB-1 TO SIB-21
ATTACHMENT NO. 1 – HOW TO SUBMIT YOUR BID RESPONSE IN OPENGOV.....	OGSG-1 TO OGSG-3

BID RELATED FORMS

- BIDDERS MINIMUM REQUIREMENTS ..... MR-1 TO MR-4
- CONFLICT OF INTEREST CERTIFICATE..... COI-1 TO COI-3
- BID FORM..... BF-1 TO BF-3
- BID BOND FORM..... BBF-1 TO BBF-2
- TRIMBLE (TID) E-BUILDER USE AGREEMENT..... EB-1
- SWORN STATEMENT, PUBLIC ENTITY CRIME ..... PEC-1 TO PEC-2
- CERTIFICATION, SCRUTINIZED COMPANIES..... CCRSC-1
- E-VERIFY ACKNOWLEDGEMENT ..... E-VERIFY

INVITATION TO BID

INSTALLATION OF NEW CRANE STOW PIN SOCKETS AT TMT
TALLEYRAND MARINE TERMINAL
JAXPORT PROJECT NO.: T2027.01
JAXPORT CONTRACT NO.: MC-2132

October 15, 2026

Sealed bids will be received by JAXPORT up to **2:00 PM (ET)**, **WEDNESDAY, NOVEMBER 18, 2026**, at which time they shall be opened via "ZOOM" at: **https://us02web.zoom.us/j/81820571773?pwd=wnNoOdQuV2PWbgEptjpeEEIAgOiZQH.1**, **Meeting ID: 818 2057 1773, Passcode: 850584** for **INSTALLATION OF NEW CRANE STOW PIN SOCKETS AT TMT**.

All bids must be submitted in accordance with specifications and drawings for Contract No. **MC-2132.**

IT IS MANDATORY THAT THE BIDDER SHALL ACKNOWLEDGE THE INCLUSION OF ALL ADDENDA ON THE BID FORM, FORM BF. ACKNOWLEDGEMENT SHALL BE MADE BY INITIALS AND DATE. FAILURE TO ACKNOWLEDGE ALL ADDENDA MAY RESULT IN REJECTION OF THE BID.

PLEASE VISIT HTTPS://WWW.JAXPORT.COM/PROCUREMENT/ACTIVE-SOLICITATIONS/ PRIOR TO THE BID OPENING TO DETERMINE IF ANY ADDENDA HAVE BEEN RELEASED ON THIS CONTRACT.

A MANDATORY PRE-BID CONFERENCE WILL BE HELD ON THURSDAY, OCTOBER 29, 2026, AT 10:00 AM (ET), "ZOOM" at:

https://us02web.zoom.us/j/87100105746?pwd=oc0cVO4pAblUyGzBnfJ02VdEw4jCuR.1, Meeting ID: 871 0010 5746, Passcode: 335805

A MANDATORY SITE VISIT WILL BE HELD ON THURSDAY, OCTOBER 29, 2026, AT 2:00 PM (ET).

ATTENDANCE BY A REPRESENTATIVE OF EACH PROSPECTIVE BIDDER IS MANDATORY.

Bid and contract bonds are required.

This project is funded by JAXPORT.

The mandatory SEB Participation Goal established for this project is **0%**. However, SEB participation is encouraged.

Angelia Wilson
Angelia Wilson (Oct 14, 2026 11:20:18 EDT)

Angelia Wilson
Director, Procurement Services
JAXPORT

BID CONTENTS AND FORMAT

INSTALLATION OF NEW CRANE STOW PIN SOCKETS AT TMT

Interested bidders shall prepare and electronically submit a bid package consisting of bidder's REQUIREMENTS (a-h), signed FORM BF and any other technical information required to be considered for award of this project. JAXPORT no longer accepts any bid packages submitted by mail or hand-delivery. Please visit JAXPORT's website at www.jaxport.com for more information and updates. Bids received via email, fax or hand delivery will be declared nonconforming and will not be read or accepted.

1. BIDDER REQUIREMENTS FOR CONTRACT NO.: **MC-2132**

   NAME OF FIRM: _____

   The electronically submitted documents shall contain the following information:

   a. Bid bond, certified check or cashier's check for 5 percent of the amount of the bid (See Article 6 in Supplemental Instructions to Bidders).

   b. Form COI, "Conflict of Interest Certificate" statement.

   c. Form PEC, "Sworn Statement on Public Entity Crime."

   d. Bidders Representation and Authorization – Written Statement (Only if necessary).

   e. Form MR, "Bidders Minimum Requirements" (See Article 4 in Supplemental Instructions to Bidders).

   f. Form CCRSC, "Contractor Certification Regarding Scrutinized Companies."

   g. Form E-Verify, "Acknowledgement and Acceptance of E-Verify Compliance."

   h. Form EB-1 "Trimble (TID) E-Builder User Agreement".

2. **Signed FORM BF, and any technical information required** to be submitted by the specifications.

Alternatively, the entire bid package must be submitted in **PDF format only** through OpenGov Electronic Bid Submission, in sufficient time to ensure receipt prior to the time specified below.

Bids must be submitted prior to 2:00 PM (ET), NOVEMBER 18, 2026. The submit button will deactivate at exactly 2:00 PM (ET) and you will not be permitted to submit your bid regardless of where you are in the process. Please plan accordingly.

The PDF file name(s) should read "**MC-2132**." "How to Submit Your Bid Response in OpenGov" is provided as "Attachment No. 1." Additional instructions on how to navigate in OpenGov, click the below link to access the **"Bidders Portal Instructional Training Guide":**

https://opengov.my.site.com/support/s/article/8e675a48-dad3-4759-9bae-6b4cb7970d21

It is the sole responsibility of the Bidder to have its bid submitted to JAXPORT as specified herein before the aforementioned date and time. For the purpose of the ITB, a Bid is considered delivered when confirmation of delivery is provided by OpenGov. Bidders must ensure that its electronic submission in OpenGov can be assessed and viewed at the time of the Bid Opening. JAXPORT will consider any file that cannot be immediately accessed and viewed at the time of the Bid Opening (including, but not limited to encrypted files, password protected files, or incompatible files) to be blank or incomplete, as context requires, and, therefore, unacceptable. Bidders will not be permitted to unencrypt files, remove password protections, or resubmit documents after Bid Opening to make a file viewable if those documents are required with Bid. All expenses for submitting Bids to JAXPORT are to be borne by the Bidder and will not be borne, charged to or reimbursed by JAXPORT in any manner or under any circumstance.

If your firm does not intend to submit a bid for this project, please complete Form NB and fax to (904) 357-3077 or e-mail to Elijah.Wright@JAXPORT.com

"NO BID" RESPONSE

INSTALLATION OF NEW CRANE STOW PIN SOCKETS AT TMT

PROJECT: **INSTALLATION OF NEW CRANE STOW PIN SOCKETS AT TMT**

CONTRACT NO. **MC-2132**

BID OPENING DATE: **WEDNESDAY, NOVEMBER 18, 2026** TIME: **2:00 PM (ET)**

If your firm does not intend to submit a bid for this project, please provide us with the information requested below and fax to (904) 357-3077 or e-mail to Elijah.Wright@JAXPORT.com NAME OF FIRM: _____

We are unable to submit a bid for this project for the following reasons:

SIGNATURE: _____

TITLE: _____

TELEPHONE: ( )

We ( ) are / ( ) are not interested in bidding on similar JAXPORT projects in the future.

SUPPLEMENTAL INSTRUCTIONS TO BIDDERS

INSTALLATION OF NEW CRANE STOW PIN SOCKETS AT TMT

ARTICLE	TITLE	PAGE NO.
1.	Authentication of Bid Form	SIB-2
2.	Award of Contract	SIB-2
3.	Bid Amendments	SIB-2
4.	Bidders Minimum Requirements	SIB-3
5.	Bid Form	SIB-3
6.	Bid Guaranty	SIB-4
7.	Bid Opening – Procedure	SIB-4
8.	Examination of Drawings, Specifications, and Site of Work	SIB-4
9.	Execution of the Agreement	SIB-5
10.	Failure to Execute the Agreement	SIB-5
11.	Familiarity with Laws	SIB-5
12.	Florida State Sales Tax	SIB-5
13.	Omissions, Discrepancies and Addenda	SIB-5
14.	Protest Procedures	SIB-6
15.	Public Meeting Requirements	SIB-6
16.	Requirements of the Bidders	SIB-6
17.	Statements By Bidders	SIB-6
18.	E-Verify Program for Employment Verification	SIB-10
19.	Small & Emerging Business Participation Goal	SIB-10
20.	Public Records	SIB-11
21.	Security Implementation Procedure	SIB-12
22.	Electronic Data Requirements Trimble (TID) E-Builder	SIB-17

SUPPLEMENTAL INSTRUCTIONS TO BIDDERS

INSTALLATION OF NEW CRANE STOW PIN SOCKETS AT TMT

1. AUTHENTICATION OF BID FORM

All bids submitted for this project shall be signed as outlined below. **FAILURE ON THE PART OF THE INDIVIDUAL, PARTNERSHIP OR CORPORATION TO SIGN THE BID, FORM BF, WILL CONSTITUTE A MATERIAL IRREGULARITY AND SHALL RESULT IN THE REJECTION OF THE BID.**

a. If made by an individual, Form BF shall show the name and business address of the individual or firm and shall be signed by the individual or authorized representative of the individual.

b. If made by a partnership, Form BF shall show the name and business address of the partnership and shall be signed by a partner or authorized representative of the partnership.

c. If made by a corporation, Form BF shall show the name and business address of the corporation and shall be signed by an officer or an authorized representative of the corporation.

2. AWARD OF CONTRACT

JAXPORT reserves the right to award this contract to the lowest, responsive, responsible bidder, whose bid is fully conforming to the requirements of the bid documents. Nevertheless, JAXPORT reserves the right to waive informalities and minor irregularities in any bid, to reject any or all bids, and to accept the bid, which in its judgment, will be in the best interest of JAXPORT. JAXPORT will be the sole judge of which proposal will be in its best interest, and its decision will be final.

JAXPORT reserves the right to award this contract to the bidder offering the lowest price consistent with meeting all specifications, terms, conditions, and delivery requirements set forth on this bid. No award will be made until all necessary inquiries have been made into the responsibility of the lowest conforming bidder and JAXPORT is satisfied that the lowest bidder met all the requirements, is qualified and has the necessary organization, capital and resources required to perform the work under the terms and conditions of the contract. JAXPORT reserves the right to accept or reject any or all proposals, in whole or in part.

3. BID AMENDMENTS

Bid price amendments are permissible if received by JAXPORT Procurement Services, via OpenGov electronic submission, prior to the bid opening time stated in the "Invitation to Bid."

Refer to **Attachment No. 1** "How to Submit Your Bid Response in OpenGov" for additional instructions on how to navigate in OpenGov. Click the below link to access the **"Bidders Portal Instructional Training Guide":**

https://opengov.my.site.com/support/s/article/8e675a48-dad3-4759-9bae-6b4cb7970d21

It is the responsibility of the individual, partnership, or corporation submitting the bid to ensure that any amendment is made prior to the bid opening time stated in the "Invitation to Bid." JAXPORT accepts no responsibility for late amendments, and bidders shall not be permitted to modify their bids after the specified time for the bid opening. EMAIL, MAIL AND FACSIMILE TRANSMISSION OF AMENDMENTS TO JAXPORT WILL NOT BE ACCEPTED.

All amendments must be signed by an individual authorized to sign the bid. An unsigned amendment shall be considered nonconforming and will therefore cause the amendment to be rejected. No amendment shall be withdrawn after the closing date and time specified herein.

4. BIDDERS MINIMUM REQUIREMENTS

Contractors are required to upload via OpenGov Electronic Bid Submission FORM MR, "BIDDERS MINIMUM REQUIREMENTS," and include it as part of the "BIDDER REQUIREMENTS" (see section "Bid Contents and Format"). Before an award is made, Minimum Requirements of the apparent low conforming bidders will be examined to determine the Contractor's financial responsibility and work history, experience and current workload. Additional information may be requested if JAXPORT considers it necessary to make a proper evaluation. Based on the review of the Contractor's financial condition, previous experience, current workload or any other information included on BIDDERS MINIMUM REQUIREMENTS or subsequently requested from the Contractor, JAXPORT reserves the right to reject any Contractor's bid, should, in JAXPORT's sole judgment, the Contractor is or appears to be unqualified or incapable of successfully completing the project in a timely manner.

The Minimum Requirements requires a financial statement as outlined in Section 119.071, Florida Statutes, and provides:

"Any financial statement which an agency requires a prospective bidder to submit in order to pre-qualify for bidding or for responding to a proposal for a road or any other public works' project is exempt from s. 119.071 (1c) and s.24(a), Art. I of the State Constitution."

5. BID FORM

The bidder shall submit the bid on Bid Form BF furnished herein. If additional forms are required, they may be secured from JAXPORT or may be duplicated. The bidder shall state the price, typewritten or written in ink, in numerals, for which the bidder proposes to do each item of work. See "BID CONTENTS AND FORMAT" section for more details.

NOTE: IT IS MANDATORY THAT THE BIDDER SHALL ACKNOWLEDGE THE INCLUSION OF ALL ADDENDA ON THE BID FORM, FORM BF. ACKNOWLEDGEMENT SHALL BE MADE BY INITIALS AND DATE. FAILURE TO ACKNOWLEDGE ALL ADDENDA MAY RESULT IN REJECTION OF THE BID.

PLEASE VISIT HTTPS://WWW.JAXPORT.COM/PROCUREMENT/ACTIVE-SOLICITATIONS/ PRIOR TO THE BID OPENING TO DETERMINE IF ANY

ADDENDA HAVE BEEN RELEASED ON THIS CONTRACT.

6. BID GUARANTY

Each bidder shall furnish with the bid a bid bond in an amount not less than **5** percent of the total bid, as a guaranty that the bid will not be withdrawn for a period of **90** calendar days after opening of bids. As soon as practicable after the opening of bids, any checks submitted as guaranty by bidders who are not among the three lowest cost, responsive, responsible bidders will be returned. Checks submitted by the remaining bidders will be returned after execution of the Agreement and submittal of the required bonds by the successful bidder.

If contract bond is not furnished within the time stated herein, the bid guaranty will be forfeited and the contract may be awarded the next low conforming bidder. **THE BID BOND MUST BE SECURED FROM AND EXECUTED BY AN AGENCY DULY-LICENSED TO DO BUSINESS IN THE STATE OF FLORIDA, PURSUANT TO CHAPTER 255 OF THE FLORIDA STATUTES, SECTION 255.05. FAILURE TO FURNISH THE BID GUARANTY, INCLUDING POWER OF ATTORNEY, IF REQUIRED, WILL CONSTITUTE A MATERIAL IRREGULARITY AND SHALL RESULT IN THE REJECTION OF THE BID**.

If a bid bond is used, it shall be written through a Surety bond agency and with a Surety company meeting the same specifications as those required for contract bonds.

The bid bond provided by the Owner of the Property/Contracting Public Entity may be utilized (see Form BBF). Surety's standard bond form for State of Florida is acceptable. Refer also to "Surety Bonds" of the "General Conditions."

7. BID OPENING - PROCEDURE

At the time and place stated in the "Invitation to Bid," JAXPORT's representative will announce the closure of bidding and commence with the Bid Opening. Bidders are invited to attend the **ZOOM Meeting** proceedings**.**

The Bidder's name and the total amount used for basis of award will be the only information read aloud.

8. EXAMINATION OF DRAWINGS, SPECIFICATIONS, AND SITE OF WORK

The bidder is advised, before submitting a bid, to visit the site of the proposed work and become familiar with the nature and extent of the work and any local conditions that may in any manner affect the work to be done, and equipment, materials, and labor required. The bidder is required to examine carefully the drawings and specifications and contract forms, and to be informed regarding any and all conditions and requirements contained herein that may in any manner affect the work to be performed. No allowances will be made for conditions overlooked or ignored by the bidder.

9. EXECUTION OF THE AGREEMENT

The individual, firm, or corporation to which the contract has been awarded shall sign the Agreement and return it within ten (10) calendar days after receipt from JAXPORT.

10. FAILURE TO EXECUTE THE AGREEMENT

Failure on the part of the successful bidder to execute the Agreement as required will be just cause for the annulment of the award, and in the event of the revocation of the award, the bidder shall forfeit the Bid Guaranty. This forfeiture shall not be construed as a penalty, but as reasonable, fixed and liquidated damages because of the bidder's failure to enter into contract with JAXPORT.

11. FAMILIARITY WITH LAWS

The bidder shall be familiar and comply with all Federal, State, and local laws, ordinances, rules and regulations that in any manner affect the work. Lack of such knowledge on the part of the bidder will in no way relieve the bidder from any responsibility.

12. FLORIDA STATE SALES TAX

It is the bidder's sole responsibility to incorporate any and all applicable taxes into the bid. However, Chapter 212 of the Florida Statutes provides JAXPORT with sales tax exemption for all procurements made directly by JAXPORT. After a contract has been awarded, certain items which have been included in this bid may be purchased directly by JAXPORT in order to benefit from this tax savings program (See Special Conditions, Section 10, Tax Savings Program, General for more information).

13. OMISSIONS, DISCREPANCIES AND ADDENDA

a. Should an omission or discrepancy be found in the bidding documents, or if there is any doubt as to the meaning, the bidder shall notify JAXPORT Procurement Services, in writing, in sufficient time in order that an addendum might be issued to all prospective bidders, if necessary.

b. Any addenda issued by JAXPORT for the purpose of changing the intent of the plans and specifications or clarifying the meaning of same shall be binding in the same way as if written in the specifications. All addenda will be issued by Procurement Services prior to the bid opening. It is each bidder's sole responsibility to verify they have received all addenda in sufficient time to properly evaluate their contents before submitting a bid. It is the usual practice for JAXPORT to email addenda to known prospective bidders, but JAXPORT does not guarantee that all bidders will receive addenda in this manner in due time before the bid opening.

c. It is mandatory that the bidder shall acknowledge the inclusion of all addenda on the bid form, FORM BF. Acknowledgement shall be by initials and date.

Failure to acknowledge all addenda may result in rejection of the bid.

14. PROTEST PROCEDURES

Respondents shall file any protest regarding this ITB in writing, in accordance with JAXPORT's Protest Procedures promulgated on SOP- 1215 Procurement Code for the Jacksonville Port Authority, available at https://www.jaxport.com/procurement/

15. PUBLIC MEETING REQUIREMENTS

JAXPORT complies with Section 286.011 of the Florida Statutes. Therefore, certain types of staff meetings and meetings of JAXPORT Awards Committee, and Board of Directors are required to be held in public, with sufficient notice made of the time and date of the meeting(s). All notices of public meetings are posted in the lobby of JAXPORT, 2831 Talleyrand Avenue, Jacksonville, FL 32206 and on JAXPORT's website at www.jaxport.com. For information concerning when the project(s) will be submitted for award, contact JAXPORT Procurement Services at telephone (904) 357-3017, Monday through Friday.

16. REQUIREMENTS OF THE BIDDERS

The successful bidder shall hold a current Contractor's certificate for the type of work to be performed, if it is required by JAXPORT and under applicable law. Evidence of such certificates shall be presented before contract award, or it may be requested with the Bidder's REQUIREMENTS at the time of bid.

In addition, Plumbing and Electrical Contractors and Subcontractors shall be required to hold current certificates issued by the City of Jacksonville qualifying them to perform such work. Chapter 489.103, Florida Statutes, provides that Contractors involved in work on bridges, roads, highways, railroads, or utilities and services incidental thereto, and certain specialties are exempt from licensing by the State of Florida. The Florida Department of Business and Professional Regulation advises that wharves, airfield pavements, and fences are included among the specialties which are exempt from licensing.

17. STATEMENTS BY BIDDERS

a. **CONFLICT OF INTEREST** - Pursuant to Chapter 112 of the Florida Statutes, Bidders are required to complete and submit with their bids a "Conflict of Interest" statement. Form COI is provided in the bid documents for that purpose and must be included as part of the "BIDDER REQUIREMENTS" at the time bids are submitted.

   Subcontractors, Vendors, and Suppliers selected by JAXPORT to participate in the Tax Savings Program will be required to submit Conflict of Interest statements prior to any Purchase Orders being issued. The Prime Contractor shall be responsible for obtaining those statements from Subcontractors, Vendors and Suppliers and providing same to JAXPORT in a timely manner. Refer to the "Special Conditions" entitled, "Tax Savings Program – General" of

the contract documents for more details on the Tax Savings Program.

b. **PUBLIC ENTITY CRIME** - Pursuant to Chapter 287 of the Florida Statutes, Bidders are required to complete and submit with their bids a Sworn Statement Pursuant to Section 287.133 (3) (a), Florida Statutes, on Public Entity Crimes. Form PEC is provided in the bid documents for that purpose and must be included as part of the "BIDDER REQUIREMENTS" at the time bids are submitted.

A person or affiliate placed on the convicted vendor list following a conviction for a public entity crime is prohibited from doing any of the following for a period of 36 months from the date of being placed on the convicted vendor list:

- Submitting a bid on a contract to provide any goods or services to a public entity;
- Submitting a bid on a contract with a public entity for the construction or repair of a public building or public work;
- Submitting bids on leases of real property to a public entity;
- Being awarded or performing work as a contractor, supplier, subcontractor, or consultant under a contract with any public entity; and
- Transacting business with any public entity in excess of Category Two threshold amount ($35,000) provided in section 287.017 of the Florida Statutes.

c. **DISCRIMINATORY VENDOR LIST** – An entity or affiliate placed on the discriminatory vendor list pursuant to section 287.134 of the Florida Statutes may not:

- Submit a bid on a contract to provide any goods or services to a public entity;
- Submit a bid on a contract with a public entity for the construction or repair of a public building or public work;
- Submit bids on leases of real property to a public entity;
- Be awarded or perform work as a contractor, supplier, subcontractor, or consultant under a contract with any public entity; or
- Transact business with any public entity.
- To view a current list, visit: http://www.dms.myflorida.com/business_operations/state_purchasing/vendor_information/convicted_suspended_discriminatory_complaints_vendor_lists

d. **BIDDERS REPRESENTATION AND AUTHORIZATION** – In submitting a bid, each Bidder understands, represents, and acknowledges the following (if the Bidder cannot so certify to any of the following, the Bidder shall submit with its response a written explanation of why it cannot do so).

- The Bidder is not currently under suspension or debarment by the State or any other governmental authority.
- To the best of the knowledge of the person signing the bid documents, the Bidder, its affiliates, subsidiaries, directors, officers, and employees are not currently under investigation by any governmental authority and have not in the last ten (10) years been convicted or found liable for any act prohibited by law in any jurisdiction, involving conspiracy or collusion with respect to bidding on any public contract.
- Bidder has not within the last five (5) years, had a delinquent obligation to the State or any other governmental authority, including a claim for liquidated damages under any other contract.
- The bid submission is made in good faith and not pursuant to any agreement or discussion with, or inducement from, any firm or person to submit a complementary or other noncompetitive response.
- The prices and amounts have arrived independently and without consultation, communication, or agreement with any other respondent or potential respondent; neither the prices not amounts, actual or approximate, have been disclosed to any Bidder or potential Bidder, and they will not be disclosed before the solicitation bid opening.
- The Bidder has fully informed the Buyer in writing of all convictions of the firm, its affiliates (as defined in section 287.133(1)(a) of the Florida Statutes), and all directors, officers, and employees of the firm and its affiliates for violation of state or federal antitrust laws with respect to a public contract for violation of any misrepresentation with respect to a public contract. This includes disclosure of the names of current employees who were convicted of contract crimes while in the employ of another company.
- The product(s) offered by the Bidder will conform to the specifications without exception.
- The Bidder has read and understands the Contract terms and conditions, and the submission is made in conformance with those terms and conditions.
- If an award is made to the Bidder, the Bidder agrees that it intends to be legally bound to the Contract that is formed with JAXPORT.
- The Bidder has made a diligent inquiry of its employees and agents responsible for preparing, approving, or submitting the bid response, and has been advised by each of them that he or she has not

participated in any communication, consultation, discussion, agreement, collusion, act or other conduct inconsistent with any of the statements and representations made in the response.

- The respondent shall indemnify, defend, and hold harmless the Buyer and its employees against any cost, damage, or expense which may be incurred or be caused by any error in the respondent's preparation of its bid.
- All information provided by, and representations made by, the Bidder are material and important and will be relied upon by the Buyer in awarding the Contract. Any misstatement shall be treated as fraudulent concealment from the Buyer of the true facts relating to submission of the bid. A misrepresentation shall be punishable under law, including, but not limited to, Chapter 817 of the Florida Statutes.
- That the Bidder has carefully examined the site of the work and that from his/her investigations has been satisfied as to the nature and location of the work, the kind and extent of the equipment and other facilities needed for the performance of the work, the general and local conditions, all difficulties to be encountered, and all other items which in any way affect the work or its performance.
- That the Bidder is in full compliance with all federal, state, and local laws and regulations and shall fully comply with the same during the entire term of the contract.

e. **SCRUTINIZED COMPANIES – ACTIVITIES IN SUDAN AND/OR IRAN**
Section 287.135 of the Florida Statutes prohibits agencies from contracting with a company on the Scrutinized Companies with Activities in Sudan List or on the Scrutinized Companies with Activities in the Iran Petroleum Energy Sector List, lists created pursuant to section 215.473, Florida Statutes, for goods or services over $1,000,000.

Bidders are required to complete and submit with their bids a Contractor Certification Regarding Scrutinized Companies, Form CCRSC is provided in the bid documents for that purpose and must be included in the "BIDDER REQUIREMENTS" envelope at the time bids are submitted.

Bidder must certify that it is not listed on either the Scrutinized Companies with Activities in Sudan List or the Scrutinized Companies with Activities in the Iran Petroleum Energy Sector List, created pursuant to section 215.473, Florida Statutes. Pursuant to section 287.135(5), F.S., Contractor agrees JAXPORT may terminate this contract immediately without penalty if the Contractor is found to have submitted a false certification or if Contractor is placed on the Scrutinized Companies with Activities in Sudan List or the Scrutinized

Companies with Activities in the Iran Petroleum Energy Sector List.

18. E-VERIFY PROGRAM FOR EMPLOYMENT VERIFICATION

The successful bidder agrees to utilize the U.S. Department of Homeland Security's E-Verify system to verify the employment eligibility of all new employees hired by the contractor during the term of this contract. Successful bidders must include in all subcontracts the requirement that subcontractors performing work or providing goods and services utilize the E-Verify system to verify the employment eligibility of all new employees hired by the subcontractor during the contract term. The successful bidder further agrees to maintain records of its participation and compliance and its subcontractor's participation and compliance with the provisions of the E-Verify program, and to make such records available to JAXPORT upon request. Failure to comply with this requirement will be considered a material breach of the contract.

19. SMALL & EMERGING BUSINESS (SEB) PARTICIPATION GOAL 0%.

The Authority has determined that the SEB participation is 0%. However, SEB participation is encouraged for this project. SEB participation in the specified percentage must be met in order to satisfy this requirement, or good faith efforts submitted to demonstrate why the goal could not be achieved, in accordance with ARTICLE V, Section 5.10.

Contractors will take all necessary affirmative steps to ensure that small business firms, disadvantaged business firms, and labor surplus area firms are used when possible.

- Small Business Firms – Designated by the Small Business Administration.
- Disadvantaged Business Firms – Designated by FDOT
- Labor Surplus Area Firms – Firms geographically located in distressed labor surplus areas designated by the Secretary of Labor

Contractors shall ensure the following actions are taken in dealing with the above-mentioned firms:

1. Placement on Bidders List;
2. Ensuring that solicitations are mailed
3. Allocating requirements into smaller amounts, when feasible, to permit maximum participation;
4. Establishing delivery requirements, when feasible, for compatibility with capability of the above-listed firms;
5. Using the services of the Small Business Administration, and

6. When subcontracts are considered, the Contractors will take these steps (1-5) for subcontracts.

20. PUBLIC RECORDS

In accordance with Section 119.0701, Florida Statutes, the Contractor shall:

(a) Keep and maintain public records required by JAXPORT to perform the services; and

(b) Upon request from JAXPORT's custodian of public records, provide JAXPORT with a copy of the requested records or allow records to be inspected or copied within a reasonable time at a cost that does not exceed the cost provided for in Chapter 119, Florida Statutes, or as otherwise provided by law; and

(c) Ensure that public records that are exempt or confidential and exempt from public records disclosure requirements are not disclosed except as authorized by law for the duration of the Contract term and following completion of this Contract if Contractor does not transfer the records to JAXPORT; and

(d) Upon completion of this Contract, transfer to JAXPORT at no cost all public records in possession of Contractor or keep and maintain public records required by JAXPORT to perform the service. If Contractor transfers all public records to JAXPORT upon completion of this Contract, Contractor shall destroy any duplicate public records that are exempt or confidential and exempt from public records disclosure requirements. If Contractor keeps and maintains public records upon completion of this Contract, Contractor shall meet all applicable requirements for retaining public records. All records stored electronically must be provided to JAXPORT upon request from JAXPORT's custodian of public records in a format that is compatible with JAXPORT's information technology systems.

The above requirements apply to a "Contractor" as defined in Section, 119.0701, Florida Statutes.

IF CONTRACTOR HAS QUESTIONS REGARDING THE APPLICATION OF CHAPTER 119, FLORIDA STATUTES, IT IS THE CONTRACTOR'S DUTY TO PROVIDE PUBLIC RECORDS RELATING TO THIS CONTRACT. CONTACT JAXPORT'S CUSTODIAN OF PUBLIC RECORDS AT (904) 357-3091 *public.records@jaxport.com*; JACKSONVILLE PORT AUTHORITY, PUBLIC RECORDS REQUEST, 2831 TALLEYRAND AVENUE, JACKSONVILLE, FLORIDA 32206.

21. SECURITY IMPLEMENTATION PROCEDURE

JAXPORT's rigid security standards include the Federal Transportation Worker Identification Credential (TWIC) program, which is administered by the Transportation Security Administration. TWIC is required for unescorted access to all JAXPORT terminals. It is your responsibility as the Prime Contractor to ensure that all of your employees and sub-contract personnel working for your company have been properly screened and credentialed with TWIC, and the JAXPORT Business Purpose Credential.

Transportation Worker Identification Credential (TWIC)

The TWIC is required for all Prime Contractor/Sub-Contractor employees working on the job site for this Contract. This credential is for all personnel requiring unescorted access to secure-restricted areas of Maritime Transportation Security Act (MTSA)-regulated facilities. TSA will issue a tamper-resistant "Smart Card" containing the person's biometric (fingerprint template) to allow for a positive link between the card and the individual.

The fee for obtaining each TWIC® is $125.25, and the credential is valid for five years. The pre-enrollment process can be initiated online at https://universalenroll.dhs.gov/ or at an IdentoGo TSA's Universal Enrollment Service Center.

TWIC: Universal Enrollment Centers

The Jacksonville Universal Enrollment Center is located at: 2121 Corporate Square Blvd. Building A, Suite 165, Jacksonville, FL 32216. The office hours are Monday-Friday: 09:00 AM –11:00AM / 12:00PM- 6:00 PM, For general information you can call the TWIC Call Center at 1-855-347-8371, Monday-Friday, 8 a.m. to 10 p.m. Eastern Time.

JAXPORT Business Purpose Credential

In addition to the TWIC, JAXPORT requires a JAXPORT Business Purpose Credential to be issued and registered at JAXPORT's Access Control Center located at the 9620 Dave Rawls Blvd. Jacksonville Fl. 32226 (Brick Building next to the Main Gate concourse). Hours of operation are Monday-Friday 7:30AM-4:30PM. The JAXPORT Business Purpose Credential is issued at no cost but expires at the end of the contract provisions.

The JAXPORT prime contractor is responsible for sponsoring all sub-contractors for the JAXPORT Business Purpose Credential.

Federal Training Requirement: (33CFR 105.215) Maritime Security Awareness Training

JAXPORT is a federally regulated facility under the Maritime Transportation Security Act of 2002 (MTSA) as codified under the US Code of Federal Regulation 33 CFR Chapter 1, Subchapter H Part 105.

33 CFR 105.215-Security training for all other facility personnel. All other facility personnel, including contractors, whether part-time, full-time, temporary, or permanent, must have knowledge of Maritime security measures and relevant aspects of the TWIC program, through training or equivalent job experience.

To meet the requirements of 33 CFR 105.215; the Prime Contractor/Sub-Contractor employees and all support personnel: Engineers, Suppliers, Truck Drivers, Laborers, Delivery persons etc. (NO EXCEPTIONS) are required to attend JAXPORT's Maritime Security Training held every Wednesday (10am, 2pm & 5pm) at JAXPORT's Access Control Building. Contact the JAXPORT Access Control Center to arrange for the training. JAXPORT will work with Contractors to conduct timely Maritime Security Training classes for larger groups.

All Prime Contractor/Sub-Contractor employees working on the job site for JAXPORT are required to attend JAXPORT's 33 CFR 105.215 (Security/Safety Training for All Other Facility Personnel) class at a cost of $35.00 per person. Arrangnments can be made by calling JAXPORT Access Control Phone (904) 357-3344.

TWIC Escort Provisions

To ensure contractors can begin work after they receive a Notice to Proceed, JAXPORT will allow prime contractors to have dedicated employee TWIC Escort(s) to handle those contractor employees who have not yet received their TWIC. Escorted employees must have a TWIC receipt validated by Access Control to receive a temporary JAXPORT Business Purpose credential.

Contractor deliveries from -TWIC vendors may be escorted by JAXPORT approved Prime Contractor escorts. The prime contractor will be required to submit a request for TWIC Escort privileges to accesscontrol@jaxport.com. Once approved, the contractor's employee(s) will attend a JAXPORT provided MTSA TWIC Escort Class in addition to the standard MTSA 33 CFR 105.215 Security Class at a combined cost of $55.00. **These authorized individual(s) must have no collateral duties that will separate the escort from the escorted visitor while serving as escort.** Note - Limitations to the number of TWIC Escort authorizations will be set by the JAXPORT Public Safety Department.
Truck drivers, vendors, labor may not conduct escorts.

A Contractor authorized by JAXPORT to conduct an escort of a non-TWIC holder in a restricted area must have:

- Successfully completed MTSA 33 CFR 105.215 Security/ Escort Class at $55.00
- Have a valid TWIC on their person
- Have an approved JAXPORT TWIC ESCORT credential on their person
- Have a tamper-resistant laminated government issued photo identification card on their person.

TWIC Escorts must complete the JAXPORT TWIC Escort Form daily before getting to the access gate. The form will be kept on file at the JAXPORT Security Operations Center (SOC).

The Prime Contractor assumes full liability for the escorted person(s) while on JAXPORT property. The person under escort must have a continuous side by side escort in a secure-restricted area. Federally (USCG / TSA) imposed fines and or consequential damages resulting from a failed TWIC Escort by the Prime or Sub-contractor will be the responsibility of the JAXPORT Prime Contractor regardless of whether it is a direct employee. Escort by the Prime or Sub-contractor will be on a 1 to 3 ratio.

Federal regulation definition: 33.CFR 101.105

Escorting means: ensuring that the escorted individual is continuously accompanied while within a secure area in a manner sufficient to observe whether the escorted individual is engaged in activities other than those for which escorted access was granted. This may be accomplished via having side-by-side companion or monitoring, depending upon where the escorted individual will be granted access. Individuals without TWIC may not enter restricted areas without having an individual who holds a TWIC as a side-by-side companion.

JAXPORT TWIC ESCORTS

JAXPORT may provide TWIC escorts at Tariff rate with advanced notice (Minimum 24 hours).
After reviewing the Contractors operation; JAXPORT will decide the number of escorts required to meet the federal regulation ratios of TWIC escort per non-TWIC worker. This will be based on operational requirements. JAXPORT Escorts will be no more than a 1 to 3 ratio.

JAXPORT TWIC Escort Tariff Fees are published in JAXPORT's Tariff Schedule. Current rates are **Mon.-Fri. 7:00 a.m. until 6:00 p.m**. Subject to two hours minimum $200.00 first two hours; $125.00 each additional two-hour block thereafter.

After 6:00 p.m. until 7:00 a.m. weekends, holidays Subject to two hours minimum $250.00; $250.00 each additional two-hour block thereafter.

Examples:
1. One TWIC Escort for an 8-hour day is $500.00 (= 4 TWIC Credentials)
2. One TWIC Escort for 1 5-day work week is $2500.00 (= 20 TWIC Credentials)

NOTE:

- All persons entering JAXPORT under TWIC Escort are required to have a tamper-resistant laminated government issued photo identification card on their person. The Identification Card must meet the USCG MTSA standards of 33 CFR 101.515. (State issued paper temporary drivers licenses are not acceptable identification).
- Any violations of the JAXPORT USCG approved Facility Security Plans will result in

a Security Violation Hearing and be subject to temporary or permanent denial of access onto JAXPORT Terminals or ability to TWIC Escort.

Significant Designations on Terminals

- The terms "secure area" and "restricted area" do not mean the same thing. A **secure area** is defined as "the area over which an owner/operator has implemented security measures for access control." A **restricted area** is defined as" the infrastructure or locations identified in an area, vessel or facility security assessment or by the operator that require limited access and a higher degree of security protection."

- Entry through the main gates at Blount Island Terminal (BIT) constitutes entry into a secure area; tenant-controlled properties are designated as restricted areas per their individual FSPs.

- Entry into the main gates at Talleyrand Marine Terminal (TMT) and Dames Point Marine Terminal constitutes entry into a restricted area.

- Entry into the cruise terminal provisions gate, crew gate or terminal doors constitutes entry into a restricted area.

Escorts

Truck drivers, vendors, labor may not conduct escorts. The only exception will be given to the ILA President, Vice President and Business Agent when escorting for purposes other than labor.

Truck Drivers: Truck drivers at the gate with no TWIC and/or no escort into a restricted area, will be turned around and will be assisted by security traffic control to safely park until such time as the escort arrives. Truck drivers are responsible for making contact with their approved escort; JAXPORT security is not responsible for arranging or providing escorts. Escorts must assume written custody of the driver. For cargo trucks, escorts may be in a vehicle providing the escort is able to visually observe the escorted at all times. This policy DOES NOT apply to POVs.

Contractors: Contractors without a JAXPORT badge and TWIC to access the port will be under escort as defined in this policy.

Contract Security (performing security duties): Must have a JAXPORT credential and a TWIC badge and may not be escorted.

Hired Escorts: Hired escorts would be commercial companies providing escort services for tenants in restricted areas; they must be sponsored by a tenant and may be vetted and approved with additional training and an administrative fee.

Vendors: Vendors without a TWIC will be turned away unless they have a dedicated & approved TWIC escort.

Visitors: JAXPORT visitors without JAXPORT credentials may only visit five times in a 90-day period; this policy will remain in effect. Visitors should be vetted at

least 24 hours in advance and await escorts at the gate where they are seeking access. **A person with a TWIC badge, but without a JAXPORT credential will be treated as a "5/90" visitor.**

Vessel Crewmembers: When a vessel visits a JAXPORT terminal, the vessel's crew commonly needs to work in the immediate vicinity of their vessel (handling lines, taking draft readings, etc.). Some vessel crew may not have a TWIC, or they may not be U.S. Merchant Mariners. Although the dock, pier, or platform the vessel is moored to, is defined as a restricted area. There is no requirement to escort any of the vessel crew members that do not have a TWIC while they work alongside their vessel. **The area of dock is directly adjacent to the vessel and extending in shore 18 feet from the vessel shall be designated the Crewmember Confinement Area (CCA).**

Vessel crewmembers may be escorted by JAXPORT approved escorts provided they complete the *TWIC Escort form* and escort under no more than a 1 to 5 ratio (excluding labor, contractors, and vendors). Prior to and upon completion of the escort, they are to contact the JAXPORT SOC at 904.357.3360.

Vessels, in coordination with the calling facility, shall ensure all crew members do not access Restricted Areas without approved escort. Any crewmember found outside the Crew Confinement Area (CCA) without a TWIC or approved escort may be considered a security breach under the JAXPORT FSP.

Seamen Center workers, ship's agents, etc who may pick up crewmembers outside the CCA must have TWIC Escort forms on hand and deliver them to the nearest facility gate once completed.

New Hire Provision: If a new hire moves from a secured to a restricted access area, they require side-by-side escort by a TWIC holder at all times. If an individual is a newly hired vessel or facility employee who has applied for but not yet received a TWIC, the owner/operator may grant the individual accompanied access to secure areas of the vessel or facility. This accompanied access may be granted for a period of up to 30 consecutive calendar days from the date of TWIC enrollment, after notification through Homeport that the individual has passed the name-based check. Accompanied access may be extended for an additional 30 days by the local COTP if TSA has not yet issued the new hire's TWIC.

Company/tenant/operator is responsible for reporting and verifying new hires via Homeport.

This provision *may not* be used to grant temporary accompanied access to an individual being hired as a CSO, VSO, or FSO or any individual being hired to perform security as a primary duty.

Rail Access

Rail Access: It is the Coast Guard's position that, due to the unique aspects of railroad operations that can impact security at MTSA facilities, all railroad crew

servicing secure areas of a MTSA facility should possess a TWIC. The following applies at:

Blount Island Marine Terminal: CSX will contact JAXPORT SOC via e-mail in advance of train arrival on BIMT to report crew TWIC status; if a crewmember does not possess a TWIC, JAXPORT contract security will provide escort. At no time will JAXPORT contract security personnel board trains or cross train tracks.

Talleyrand Marine Terminal: All Railroad personnel entering TMT must be in possession of a TWIC.

Any violation of the JAXPORT TWIC rail policy will be treated as a security breach under the JAXPORT FSP.

Additional Comments:

The following standards must be met for escorting in the restricted areas of JAXPORT:

1. Escorts must have in their possession a valid TWIC and a permanent JAXPORT credential.
2. Visitors must have a verified reason to enter the restricted area.
3. Side by side escort requirement must be continual and uninterrupted.
4. The escorting person must be able to immediately contact JAXPORT Security Operations Center at (904.357.3360), as indicated on TWIC Escort Form.
5. JAXPORT Security must be notified immediately if the side by side escort has been compromised or the non-TWIC holder engages in unlawful or suspicious activity.
6. Non-TWIC holders will not be allowed to occupy a privately-owned vehicle (POV) without a JAXPORT authorized escort.
7. TWIC Escort Form indicates Facility and FSO responsible for the action of the escorted & employees.

TWIC Helpdesk: 1-866-347-8942

22. ELECTRONIC DATA REQUIREMENTS TRIMBLE (TID) E-BUILDER

A. General Requirements:

a) Contractor must purchase at a minimum one (1) user license (see Section 22. H. for details) from JAXPORT and shall provide at a minimum, the following to its staff:

i. Computer: Minimum Intel Pentium® 4 Processor 2.4 GHz or equivalent processor with 512MB of RAM; recommended Centrino Duo® Processors 1.6 GHz or equivalent with 2GB of RAM, or higher.

ii. Computer Operation System: Windows XP, Windows Vista, or Windows 7

iii. Web Browser: Microsoft Internet Explorer 9

iv. Work and Spreadsheet Processors: Microsoft Office Word, Excel and Outlook

v. Scheduling Software: Microsoft Project or Primavera

vi. Internet Service Provider: A reliable ISP in the area of the Project

vii. Connection Speed/Minimum Bandwidth: DSL, ADSL or T1 Line for transferring a minimum of 3 Mbps Downstream and 512 Kbps Upstream

b) Contractor shall provide its management personnel assigned to this Project with access to personal computers and the Internet on a daily basis.

B. Project Web Requirements; Use of Trimble (TID) E-Builder Enterprise:

This project will utilize a web-based project management tool called Trimble (TID) E-Builder EnterpriseTM. This web-based application is a collaboration tool, which will allow all project team members continuous access through the Internet to important project data as well as up to the minute decision and approval status information.

Contractor shall conduct Project controls, outlined by JAXPORT, Design Firm (EoR), and the Project Manager, utilizing Trimble (TID) E-Builder EnterpriseTM. No additional software will be required. Furthermore, JAXPORT'S Engineering and Construction Department will assist Contractor in providing training of personnel.

Contractors shall have the responsibility for visiting the Project web site on a daily basis, and as necessary to be kept fully appraised of Project developments, for correspondence, assigned tasks and other matters that transpire on the site. These may include but are not limited to: Contracts, Contract Exhibits, Contract Amendments, Drawing Issuances, Addenda, Bulletins, Permits, Insurance & Bonds, Safety Program Procedures, Safety Notices, Accident Reports, Personnel Injury Reports, Schedules, Site Logistics, Progress Reports, Daily Logs, Non-Conformance Notices, Quality Control Notices, Punch Lists, Meeting Minutes, Requests for Information, Submittal Packages, Substitution Requests, Monthly Payment Request Applications, Supplemental Instructions, Construction Variation Directives, Potential Variation Orders, Variation Order Requests, Variation Orders, and the like. All supporting data including but not limited to shop drawings, product data sheets, manufacturer data sheets and instructions, method statements, safety MSDS sheets, Substitution Requests and the like will be submitted in digital format via Trimble (TID) E-Builder EnterpriseTM.

C. Electronic File Requirements:

In addition to the standard closeout submittal requirements detailed elsewhere in the Contract Documents, the Contractor shall also submit all closeout documents including all "As-Built Drawings", catalog cuts and Owner's Operation and Maintenance manuals in digital format. All documents (including as-built drawings) shall be converted or scanned into the Abode Acrobat (.PDF) file format and uploaded to Trimble (TID) E-Builder EnterpriseTM.

Trimble (TID) E-Builder EnterpriseTM is a comprehensive Project and Program Management system that JAXPORT will be implementing for managing documents, communications and costs between the Contractor, Design Consultants and Owner. Trimble (TID) E-Builder Enterprise™ includes extensive reporting capabilities to facilitate detailed project reporting in a web-based environment that is accessible to all parties and easy to use.

D. Central Document Vault:

Trimble (TID) E-Builder EnterpriseTM system includes a central database that maintains all project information and manages project communications amongst team members.

E. Communication/Correspondence:

Trimble (TID) E-Builder provides electronic routable communication forms that provide historical tracking, documentation, and increased accountability of project members.

F. Project Calendars:

Meetings will be scheduled and maintained centrally on Trimble (TID) E-Builder EnterpriseTM.

G. Reporting:

All of the project and program data including documents, communications and costs are accessible through integrated online reports. These reporting tools are completely configurable by each user. All reports can be exported to Excel for added flexibility.

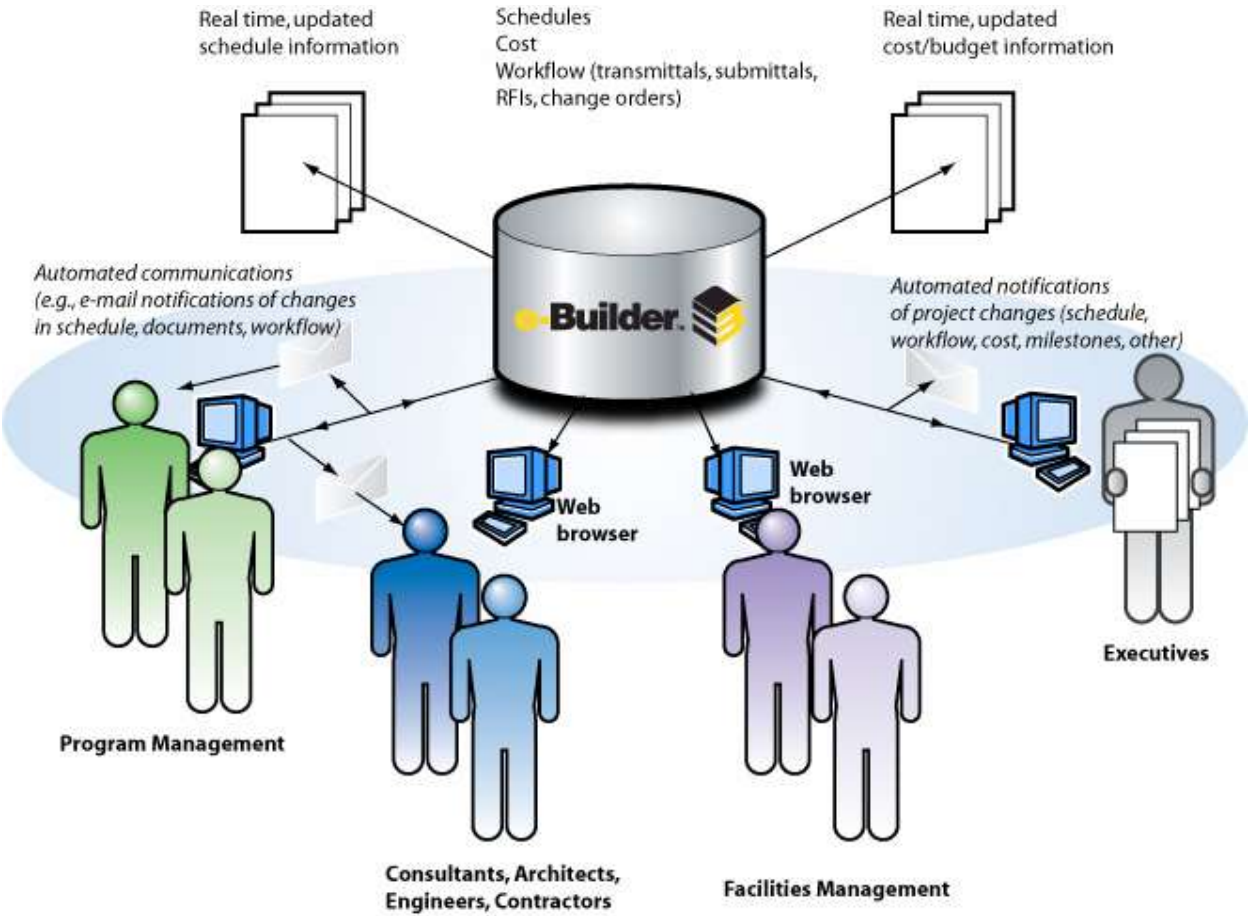

TRIMBLE (TID) E-BUILDER LICENSING REQUIREMENTS

H. Trimble (TID) E-Builder Enterprise™ User Licenses:

Each user license includes full access to Trimble (TID) E-Builder Enterprise ™ including all of the documents and reports mentioned above. Furthermore, each user license provides the Trimble (TID) E-Builder software as a service (SaS) including:

- All hosting, operation, maintenance and data backup of the Trimble (TID) E-Builder Enterprise ™ software and documents which are maintained in state-of-the-art data centers located throughout the United States.
- Quarterly Trimble (TID) E-Builder Enterprise ™ software enhancements
- Unlimited phone, email and web-based support 24-hours:

The cost for licenses that the Contractor will need to acquire will be $1,800.00 per user, per license year and shall remain in effect for a minimum of one year from license activation. Payment must be in the form of a check; payable to JAXPORT for the number

of licenses needed by the Contractor and will be collected prior to the Notice-to-Proceed.

Additional licenses can be obtained at any time during the project for the same price and license term by contacting JAXPORT's Project Manager.

How to Submit Your Bid Response in OpenGov

https://opengov.my.site.com/support/s/article/8e675a48-dad3-4759-9bae-6b4cb7970d21

Access the Bid Package

To access the bid package, vendors must log in to **OpenGov Procurement** using the email address associated with the solicitation invitation. Once logged in, vendors may view the solicitation, begin a draft response, and complete all required submission steps.

To access the bid package

1. Click the link provided in the solicitation or bid invitation email.
2. The OpenGov Procurement project page will be displayed.
3. Log in using your OpenGov credentials.
4. Click the name of the solicitation you want to access.
5. The solicitation details page will be displayed.

If you do not see the bid package you are expecting, ensure you are logged in under the correct email address.

Accept or Decline the Invitation to Bid

1. Access the solicitation to display the Overview or Details tab.
2. Select **Draft Response** to indicate your intent to bid.
3. If you do not intend to participate, select **No Bid** to formally decline.

Review Solicitation Information

The solicitation view contains key information at the top of the screen:

- **Title:** Displays the solicitation/project name.

- **Status:** Displays Open or Closed and whether you have started, submitted, or declined the response.
- **Timeframe:** Displays how much time is left before the bid due date/time.
- **Summary:** Displays the current financial total of your bid response (if applicable).
- **Bid Info:** Displays solicitation description, contact person, pre-bid meeting details, and bid instructions.
- **Documents:** Drawings, specifications, and other documents for the bid are published on this tab.
- **Addenda:** All addenda must be acknowledged before submitting your bid.

If addenda are published after you have submitted a bid response, your bid will be set back to **Draft** status and you will need to resubmit your response.

Files may be downloaded individually or in bulk (.zip format).

Submit Your Bid Response

Bid responses are submitted through the **Draft Response** workflow.

Step 1: Bid Form / Pricing

- Enter pricing for all required line items.
- Provide detail at the level required by the solicitation (lump sum, quantities, unit prices).
- The **Summary** box maintains a running total of your entries.
- Click **Save** periodically to ensure your work is saved.

Step 2: Required Documents

- Upload all required supporting documents.
- Any custom fields configured for the solicitation will also appear here.
- All uploaded documents will be displayed in a table for review.

Step 3: Additional Required Information

- Complete all additional questions or qualification statements.

- Acknowledge all addenda issued for the solicitation.

Final Submission

- Review your entire response.
- Click **Submit Response**.
- A confirmation window will appear asking you to verify your submission.
- Once confirmed, your response will be officially submitted.
- You will receive an email confirmation, and the submission date/time will be recorded.

Additional Notes

- After the bid due date/time has passed, the **Submit** button will be disabled. No late submissions will be permitted or accepted.
- If the agency publishes an addendum or modifies required fields, your response will revert to **Draft** status and must be resubmitted.
- Save your work frequently.
- Submit your response at least **60 minutes before the due time** to allow time to resolve any issues.
- Failure to submit all required information or documents will result in the bid being considered **non-responsive**.

Recall Your Bid Response (Only if Necessary)

If you need to make changes after submitting your bid:

- Click **Unsubmit Response**.
- Make necessary corrections.
- Resubmit your bid before the due date/time.

The agency cannot view your bid until you submit it again.

BIDDERS MINIMUM REQUIREMENTS

INSTALLATION OF NEW CRANE STOW PIN SOCKETS AT TMT

DATE: _____

Name of Bidder: _____

Address: _____

The following information is required in connection with your bid under Contract No. **MC-2132.**

1. Bidder is to furnish a complete set of your company's most recent audited financial statements. If no audited financial statements exist, provide firms most recent balance sheet, income statement, and statement of cash flows prepared internally, approved and attested to by your company president or chief executive officer. If the financial statements are more than 180 days old, the firm shall include evidence signed by an officer of the firm as to current financial condition in relation to the most recent reporting period.

2. Bidder is to furnish names and addresses of banks with which your firm maintains accounts, their telephone numbers and persons to contact.

   _____

   _____

   _____

3. Bidder is to list all of your current construction contracts.

Owner, Address, Phone #, Contact Name and Email	Work, Scope and Location	Contract Value	Prime Y/N	Percent Complete

BIDDERS MINIMUM REQUIREMENTS

INSTALLATION OF NEW CRANE STOW PIN SOCKETS AT TMT

4. Are you prepared to accomplish the work in accordance with the project time frame specified on page SC-2 as **90** days? _____

5. Bidder is to list names and addresses of principal trade creditors (principal is defined to mean banks, suppliers, vendors, etc.).

_____

_____

_____

6. Bidder is to list a minimum of three (**3**) projects similar in nature to the scope of work of this project with a contract value no less than **$100,000.00** over the past five (**5**) years, previously performed as the primary contractor, and date completed. The owners listed may be contacted for reference checks.

Owner, Address, Phone #, Contact Name and Email	Scope of Work	Date Started & Completed	Prime Y/N	Contract Value

7. Bidder is to list gross receipts from construction contracts during last five (5) years.

Year	Gross Receipts From Construction Contracts	Average Annual Volume: $
		Est. Annual Capacity: $

BIDDERS MINIMUM REQUIREMENTS

INSTALLATION OF NEW CRANE STOW PIN SOCKETS AT TMT

	$	Largest Job in 5 Years:
	$	
	$	Description:

8. Bidder is to list officials and key employees who will be engaged on work.

Name	Address	Position

9. In compliance with the General Conditions, Section II: Bidders must provide the names and resumes of the management team (Project Manager and Project Superintendent) proposed to be assigned to the work at all times during the project with full authority to act for you as required by the General Conditions.

   Project Manager:_____

   Project Superintendent:_____

10. Bidder is to list major equipment to be employed on contract.

Equipment Type, Capacity and Manufacturer	Age	Condition	Location

BIDDERS MINIMUM REQUIREMENTS

INSTALLATION OF NEW CRANE STOW PIN SOCKETS AT TMT

11. Bidder is to provide the number of Trimble (TID) E-Builder licenses and duration needed for completion of the contract.

    # of licenses _____ Duration of licenses_____

12. Have you determined that each proposed subcontractor is technically and financially able to perform the work to be subcontracted and prepared with equipment and personnel to complete the work within the time allowed by the specifications? _____

13. Is your firm prepared and equipped to complete the contract within the time prescribed herein? _____

14. By execution below your firm acknowledges that it has reviewed the agreement and shall execute the JAXPORT agreement form without exception or qualification.

15. Has your firm been debarred, suspended or otherwise prohibited from submitting a bid in the past 5 years?_____If yes, provide complete details:_____
    _____
    _____

16. Has your firm been terminated for cause on any project in the past 5 years?_____If Yes, all details:_____

Failure to furnish aforementioned information with the bid package may cause the bid to be non-responsive. Failure to assign the aforementioned management team to the project is a material breach of the contract that may result in termination of the contract in accordance with the General Conditions.

BIDDER (Company Name): _____

By (Signature): _____

Typed Name: _____

Title: _____

Date: _____

CONFLICT OF INTEREST CERTIFICATE

EXHIBIT B **JAXPORT Contract No.: MC-2132**

Bidder must execute either Section I or Sections II and III, hereunder, as required by Chapter 112 of the Florida Statutes. Failure to execute either Section I or Section II and Section III may result in the rejection of this bid/proposal.

SECTION I

I hereby certify that no public officer or employee of JAXPORT has a material financial interest or any business entity of which the officer, director or employee of the officer's, director's or employee's spouse or child is an officer, partner, director, or proprietor or in which such officer, director or employee or the official's, director's or employee's spouse or child, or any combination of them, has a material interest in this contract.

"Material Interest" means direct or indirect ownership of more than 10 percent of the total assets or capital stock of any business entity.

_____	_____
Signature	Company Name
_____	_____
Name of Official (type or print)	Business Address
_____	_____
City and State	Zip Code

CONFLICT OF INTEREST CERTIFICATE

EXHIBIT B **JAXPORT Contract No.: MC-2132**

SECTION II

I hereby certify that the following named public official(s) and/or JAXPORT employee(s) having material financial interest(s) (in excess of 10%) in this company have each filed Section III (Public Official Disclosure) with JAXPORT, Office of the Chief Executive Officer, 2831 Talleyrand Avenue, Jacksonville, Florida 32206-0005 prior to the time of bid opening.

Name	Title or Position	Date of PUBLIC OFFICIAL DISCLOSURE Filing

Signature	Company Name
Name of Official (type or print)	Business Address
City and State	Zip Code

CONFLICT OF INTEREST CERTIFICATE

SECTION III (Public Official Disclosure)

JAXPORT requires that a public official who has a financial interest in a bid or contract make a disclosure at the time that the bid or contract is submitted or at the time that the public official acquires a financial interest in the bid or contract. Please provide disclosure, if applicable, with bid.

Public Official Signature:_____

Public Official Name:_____

Public Position Held:_____

Position or Relationship with Bidder:_____

Date:_____

BID FORM

JAXPORT PROJECT NO.: T2027.01
JAXPORT CONTRACT NO.: MC-2132
INSTALLATION OF NEW CRANE STOW PIN SOCKETS AT TMT
TALLEYRAND MARINE TERMINAL

BIDDER'S NAME:_____

The undersigned hereby proposes to furnish all materials, equipment, labor, and supervision for the above identified project, in accordance with the specifications and drawings for Contract No. **MC-2132**, at the following price:

Scope of Work: The Jacksonville Port Authority is seeking qualified contractors to furnish all labor, materials, equipment, incidentals, testing, means and methods, and supervision necessary to install two new sets of stow pin sockets used for securing the dockside gantry cranes at the wharf location indicated on the contract drawings at the Talleyrand Marine Terminal, in accordance with Scope of Work and Contract Specifications.

A.	ITB_MC-2132 Installation of New Crane Stow Pin Sockets at TMT				
Item Number	Description				Total Item Amount
1	Mobilization/Demobilization (60%/40%)				$
2	Metal Fabrication(Stow Pin Sockets and Covers)				$
3	Drill and Dowel/Fabrication/Installation of Rebar & Couplers				$
4	Installation of Stow Pin Sockets - Ft Markers 1565 & 1720 (4 Sockets per Marker); Place and Finish Concrete				$
A.	TOTAL OF ALL LUMP SUM WORK (ITEMS 1-4)				$
B.					
Item Number	Description	Quantity	Unit	Unit Price	Total Item Amount
5	Contractor Standby due to Compensable Delay (see note 2)	5	Calendar Days		$
B.	ITEMIZED UNIT PRICE TOTAL (ITEM 5)				$
C.	BASE BID LUMP SUM TOTAL (LINES A + B) ITEMS 1-5				$
Notes					
(1) Bid Evaluation - Bids will be evaluated based on Line C above. (2) Refer to Statement of Work, Section 2.4 for the definition and enforcement requirements for Compensable delays. In all cases, the Contractor is to exercise all reasonable efforts to remain productive and to accommodate JPA and Tenant operations. The unit price will be applied as sole compensation in those instances where compensable delays occur and result in Contractor's right for compensatory damages, in accordance with the Conditions of the Contract.					

(Submission of more than one bid form for the same work by an individual, firm, partnership or corporation under the same or different names and/or any alterations, exceptions or comments contained within the bid form shall be grounds for rejection of the bid)

Basis of Award: The Authority reserves the right to award the Bidder whose price is the lowest, based on Total Bid Amount (Lines A + B) Items 1-5.

JAXPORT reserves the right to award this contract to the lowest, responsive, responsible bidder, whose bid is fully conforming to the requirements of the bid documents.

Nevertheless, JAXPORT reserves the right to waive informalities or minor irregularities in any bid, to reject any or all bids, and to accept the bid which, in its judgment, will be in the best interest of JAXPORT. JAXPORT will be the sole judge of which proposal will be in its best interest and its decision will be final.

JAXPORT reserves the right to award this contract to the bidder offering the lowest price consistent with meeting all specifications, terms, conditions, delivery requirements set forth on this bid. No award will be made until all necessary inquiries have been made into the responsibility of the lowest conforming bidder and JAXPORT is satisfied that the lowest bidder met all the requirements, is qualified and has the necessary organization, capital and resources required to perform the work under the terms and conditions of the contract. JAXPORT reserves the right to accept or reject any or all proposals, in whole or in part.

Bidder's Attestation:

Initials:_____ Date:_____ I hereby attest, as the Bidder's authorized agent, that Firm is not owned, an affiliate of, or substantially controlled or influenced by the government of a foreign country of concern as defined below.

Under Florida Statutes, JAXPORT, like all state agencies and local government entities, is prohibited from entering into any contract or agreement with a foreign country of concern, which has been defined as "the People's Republic of China, the Russian Federation, the Islamic Republic of Iran, the Democratic People's Republic of Korea, the Republic of Cuba, the Venezuelan regime of Nicolás Maduro, or the Syrian Arab Republic, including any agency of or any other entity of significant control of such foreign country of concern."

The required bid guaranty is attached hereto (see "Supplemental Instructions to Bidders") of the contract documents.

Acknowledgment of the following addenda is hereby made (see "Supplemental Instructions to Bidders"):

Addendum No. 1, Dated: _____ Initials: _____

Addendum No. 2, Dated: _____ Initials: _____

Addendum No. 3, Dated: _____ Initials: _____

Addendum No. 4, Dated: _____ Initials: _____

See also "Bid Contents and Format" section of the "Supplemental Instructions to Bidders".

_____

Name of Contractor

AUTHENTICATION (see "Supplemental Instructions to Bidders")

BID FORM

JAXPORT PROJECT NO.: T2027.01
JAXPORT CONTRACT NO.: MC-2132
INSTALLATION OF NEW CRANE STOW PIN SOCKETS AT TMT
TALLEYRAND MARINE TERMINAL

Firm

Business Address | City | State | Zip Code

Mailing Address, if different from above

Authorized Signature | Date Executed

Typed Name | Title

Telephone Number | Facsimile Number

Company Federal Tax I.D. No. | Company's Business License No.

BID BOND FORM

JAXPORT PROJECT NO.: T2027.01
JAXPORT CONTRACT NO.: MC-2132
INSTALLATION OF NEW CRANE STOW PIN SOCKETS AT TMT
TALLEYRAND MARINE TERMINAL

KNOW ALL MEN BY THESE PRESENTS, that we, the undersigned, _____ as Principal and _____ as Surety, are hereby held and firmly bound unto JAXPORT, in the sum of _____ dollars ($_____) as liquidated damages for payment of which, well and truly to be made, we hereby jointly and severally bind ourselves, our heirs, executors, administrators, successors and assigns.

The Conditions of the above obligation are such that whereas the Principal has submitted to JAXPORT, a certain Proposal attached hereto and hereby made part hereof, to enter into a Contract Agreement in writing, for construction of _____.

NOW THEREFORE,

(a) If said Proposal shall be rejected or withdrawn as provided in the Instructions to Bidders attached hereto or, in the alternative,

(b) If said Proposal shall be accepted and the Principal shall sign and deliver a formal contract document in the form of the Contract Agreement attached hereto (properly completed in accordance with said Proposal) and shall furnish the specified Bonds required by Section V of the Contract Documents in the amount equal to one hundred percent (100%) of the base bid within ten (10) consecutive days after the receipt of said contract,

thence this obligation shall be void, otherwise, it shall remain in force and effect; it being expressly understood and agreed that the liability of the Surety for any and all claims hereunder in no event shall exceed the amount of this obligation as herein stated.

The Surety, for value received, hereby stipulates and agrees that the obligations of said Surety and its bond shall be in no way impaired or affected by an extension of the time within which such Proposal may be accepted, and said Surety does hereby waive notice of any extension.

BID BOND FORM

JAXPORT PROJECT NO.: T2027.01
JAXPORT CONTRACT NO.: MC-2132
INSTALLATION OF NEW CRANE STOW PIN SOCKETS AT TMT
TALLEYRAND MARINE TERMINAL

The sum herein stated shall be due and payable to JAXPORT, and the "Surety" herein agrees to pay said sum immediately upon demand of said JAXPORT in good and lawful money of United States of America; as liquidated damages for failure thereof of said "Principal".

IN WITNESS WHEREOF, the said _____, by means of physical presence or online notarization and as "Principal" herein, has caused these presents to be signed in its name by its _____ and attested by its _____ under its corporate seal, and the said _____ as "Surety" herein, has caused these presents to be signed in its name by its _____ and attested by its _____ under its corporate seal, this _____ Day of _____A.D., 20___.

_____ (SEAL)
AS PRINCIPAL

ATTEST:

_____

Its _____

_____

Its _____

Signed, Sealed and Delivered
In the presence of:

By _____
AS SURETY

_____

_____

ELECTRONIC DATA REQUIREMENTS TRIMBLE (TID) E-BUILDER

Exhibit JAXPORT CONTRACT NO.: MC-2132

Contractor agrees to the following:

"The Trimble (TID) E-Builder system is for authorized users only. Unauthorized use of this system is strictly prohibited and may be subject to criminal prosecution. Use of this network constitutes consent to monitoring retrieval and disclosure of any information stored within the system for any purpose including criminal prosecution. Information contained within this system is confidential, intended for the licensed users and may contain information that is proprietary to the user, and/or privileged, confidential and/or otherwise exempt from disclosure under applicable state and federal law. Use by anyone other than the licensed users is not a waiver of any applicable privilege."

_____	_____
Signature	Company Name
_____	_____
Name of Official (type or print)	Business Address
_____	_____
City and State	Zip Code

SWORN STATEMENT PURSUANT TO SECTION 287.133(3)(A),

FLORIDA STATUTES, ON PUBLIC ENTITY CRIMES

THIS FORM MUST BE SIGNED AND SWORN TO IN THE PRESENCE OF A NOTARY PUBLIC OR OTHER OFFICIAL AUTHORIZED TO ADMINISTER OATHS.

1. This sworn statement is submitted to _____**JAXPORT**_____

   by _____
   (print individual's name and title)

   for _____
   (print name of entity submitting sworn statement)

   whose business address is _____

   _____

   and (if applicable) its Federal Employer Identification Number (FEIN) is _____

   (If the entity has no FEIN, include the Social Security Number of the individual signing

   this sworn statement: _____.)

2. I understand that a "public entity crime" as defined in Paragraph 287.133(1)(g), **Florida Statutes,** means a violation of any state or federal law by a person with respect to and directly related to the transaction of business with any public entity or with an agency or political subdivision of any other state or of the United States, including, but not limited to, any bid or contract for goods or services to be provided to any public entity or an agency or political subdivision of any other state or of the United States and involving antitrust, fraud, theft, bribery, collusion, racketeering, conspiracy, or material misrepresentation.

3. I understand that "convicted" or "conviction" as defined in Paragraph 287.133(1)(b), **Florida Statutes,** means a finding of guilt or a conviction of a public entity crime, with or without an adjudication of guilt, in any federal or state trial court of record relating to charges brought by indictment or information after July 1, 1989, as a result of a jury verdict, nonjury trial, or entry of a plea of guilty or nolo contendere.

4. I understand that an "affiliate" as defined in Paragraph 287.133(1)(a), **Florida Statutes,** means:

   1. A predecessor or successor of a person convicted of a public entity crime; or
   2. An entity under the control of any natural person who is active in the management of the entity and who has been convicted of a public entity crime. The term "affiliate" includes those officers, directors, executives, partners, shareholders, employees, members, and agents who are active in the interest in another person, or a pooling of equipment or income among persons when not for fair market value under an arm's length agreement, shall be a prima facie case that one person controls another person. A person who knowingly enters into a joint venture with a person who has been convicted of a public entity crime in Florida during the preceding 36 months shall be considered an affiliate.

5. I understand that a "person" as defined in Paragraph 287.133(1)(e), **Florida Statutes,** means any natural person or entity organized under the laws of any state or of the United States with the legal power to enter into a binding contract and which bids or applies to bid on contracts for the provision of goods or services let by a public entity, or which otherwise transacts or applies to transact business with a public entity. The term "person" includes those officers, directors, executives, partners, shareholders, employees, members, and agents who are active in management of an entity.

SWORN STATEMENT PURSUANT TO SECTION 287.133(3)(A),

FLORIDA STATUTES, ON PUBLIC ENTITY CRIMES

6. Based on information and belief, the statement which I have marked below is true in relation to the entity submitting this sworn statement. **(Indicate which statement applies.)**

_____Neither the entity submitting this sworn statement, nor any of its officers, directors, executives, partners, shareholders, employees, members, or agents who are active in the management of the entity, nor any affiliate of the entity has been charged with and convicted of a public entity crime subsequent of July 1, 1989.

_____The entity submitting this sworn statement, or one or more of its officers, directors, executives, partners, shareholders, employees, members, or agents who are active in the management of the entity, or an affiliate of the entity has been charged with and convicted of a public entity crime subsequent to July 1, 1989.

_____The entity submitting this sworn statement, or one or more of its officers, directors, executives, partners, shareholders, employees, members, or agents who are active in the management of the entity, or an affiliate of the entity has been charged with and convicted of a public entity crime subsequent to July 1, 1989. However, there has been a subsequent proceeding before a Hearing Officer of the State of Florida, Division of Administrative Hearings and the Final Order entered by the Hearing Officer determined that it was not in the public interest to place the entity submitting this sworn statement on the convicted vendor list. **(Attach a copy of the final order)**

I UNDERSTAND THAT THE SUBMISSION OF THIS FORM TO THE CONTRACTING OFFICER FOR THE PUBLIC ENTITY IDENTIFIED IN PARAGRAPH 1 (ONE) ABOVE IS FOR THAT PUBLIC ENTITY ONLY AND, THAT THIS FORM IS VALID THROUGH DECEMBER 31 OF THE CALENDAR YEAR IN WHICH IT IS FILED. I ALSO UNDERSTAND THAT I AM REQUIRED TO INFORM THE PUBLIC ENTITY PRIOR TO ENTERING INTO A CONTRACT IN EXCESS OF THE THRESHOLD AMOUNT PROVIDED IN SECTION 287.017, FLORIDA STATUTES FOR CATEGORY TWO OF ANY CHANGE IN THE INFORMATION CONTAINED IN THIS FORM.

_____
(signature)

_____
(date)

STATE OF _____

COUNTY OF _____

_____
NOTARY PUBLIC

My commission expires:

CONTRACTOR CERTIFICATION REGARDING

SCRUTINZED COMPANIES LISTS

Respondent Contractor Name: _____

Contractor FEIN: _____

Contractor's Authorized Representative Name and Title:

_____ _____

Address: _____

City: _____ State: _____ Zip: _____

Phone Number: _____

Email Address: _____

Section 287.135 of the Florida Statutes prohibits agencies from contracting with a company on the Scrutinized Companies with Activities in Sudan List or on the Scrutinized Companies with Activities in the Iran Petroleum Energy Sector List, lists created pursuant to section 215.473, Florida Statutes, for goods or services over $1,000,000.

As the person authorized to sign on behalf of Respondent, I hereby certify that this company, listed above by "Respondent Contractor Name," complies fully with the law and is not listed on either the Scrutinized Companies with Activities in Sudan List or the Scrutinized Companies with Activities in the Iran Petroleum Energy Sector List. I understand that pursuant to section 287.135, Florida Statutes, the submission of a false certification may subject the company to civil penalties, attorney's fees, and/or costs.

So Certified:

Authorized Representative's Signature _____

Date Signed: _____

ACKNOWLEDGEMENT AND ACCEPTANCE OF E-VERIFY COMPLIANCE

E-VERIFY PROGRAM FOR EMPLOYMENT VERIFICATION

In accordance with the Governor of Florida, Executive Order Number 11-02 (Verification of Employment Status), whereas, Federal law requires employers to employ only individuals eligible to work in the United States; and whereas, the Department of Homeland Security's E-Verify system allows employers to quickly verify in an efficient and cost effective manner;

The Contractor agrees to utilize the U.S. Department of Homeland Security's E-Verify system to verify the employment eligibility of all new employees hired by the Contractor during the term of the contract. Contractors must include in all subcontracts the requirement that all subcontractors performing work or providing goods and services utilize the E-Verify system to verify the employment eligibility of all new employees hired by the subcontractor during the contract term. The Contractor further agrees to maintain records of its participation and compliance and its subcontractor's participation and compliance with the provisions of the E-Verify program, and to make such records available to JAXPORT upon request. Failure to comply with this requirement will be considered a material breach of the contract.

By signing below, I acknowledge that I have reviewed, accept and will comply with the regulations pertaining to the E-Verify program.

Company Name | Name of Official (Please Print)

Signature of Principal | Title: | Date

JPA FPN #: T2027.01

CONTRACT RELATED DOCUMENTS

FOR

INSTALLATION OF NEW CRANE STOW PIN SOCKETS AT THE TALLEYRAND MARINE TERMINAL

Contract No.: MC-2132

TALLEYRAND MARINE TERMINAL

CONTRACT RELATED DOCUMENTS

INDEX

ITEM	PAGE NO(S).
GENERAL CONDITIONS	GC-1 TO GC-44
SPECIAL CONDITIONS	SC-1 TO SC-8
REQUIRED LIMITS OF INSURANCE	RLI-1 TO RLI-3
CERTIFICATE OF INSURANCE COMPLIANCE	COIC-1 TO COIC-3
APPLICATION FOR PAYMENT	AFP-1 & AFP-2
REQUEST FOR INFORMATION	RFI
AGREEMENT BETWEEN OWNER AND CONTRACTOR	AGR-1 TO AGR-4
CERTIFICATE OF CONTRACT COMPLETION	FCC
CERTIFICATE OF SUBSTANTIAL COMPLETION	SUBCOM
CONSENT OF SURETY COMPANY TO FINAL PAYMENT	CONSUR
OWNER'S MINIMUM PROJECT WORK RULES	PWR-1 TO PWR-2
OWNER'S SAFETY GUIDELINES	PSG-1 TO PSG-3
PERFORMANCE BOND	PB-1 TO PB-4
STATUTORY PAYMENT BOND	SPB-1 TO SPB-3

GENERAL CONDITIONS

INDEX

ITEM **PAGE NO. GC-**

SECTION I.: Preliminary Matters 2
1. Definitions 2
2. Contract Documents 3
3. Subcontracting or Assigning of Contract 4
4. Separate Contracts 5
5. Non-discrimination Provisions 5
6. Wage and Employment Laws 5
7. Royalties and Patents 6
8. Right to Audit 6

SECTION II.: The Work 7
1. Contractor's Responsibility. 7
2. Execution of the Work 11
3. Substantial Completion 16
4. Tests and Inspections 17
5. Time 18
6. Warranties and Guarantees 18

SECTION III.: Changes and Disputes 19
1. Changed Conditions. 19
2. Changes in the Work. 19
3. Claims. 22
4. Completion of Work by Owner 23
5. Default and Termination 24
6. Delays and Extensions of Time 26
7. Disputes 27
8. Recovery Rights, Subsequent to Final Payment 27

SECTION IV.: Administrative 29
1. "As-built" Drawings and Equipment Manuals 29
2. Conferences 29
3. Payments 30
4. Progress Schedule 32

SECTION V.: Insurance and Bond 34
1. Insurance and Indemnification. 34
2. Surety Bonds. 42

SECTION I.: PRELIMINARY MATTERS

1. Definitions

a. Owner: The Owner is JAXPORT or its designee authorized in writing. The words "Owner", "JAXPORT", "JPA" and "Authority" shall mean the same and are used interchangeably.

Owner Representative/Project Manager: The Owner will designate an individual or firm to be Project Manager for all work to be accomplished under the contract. All instructions and correspondence to the Contractor will be issued by the Project Manager and all requests, invoicing, and correspondence from the Contractor will be directed to the Project Manager. The Project Manager will interpret the terms and conditions of the contract and be the judge of the performance of the Contractor on behalf of the Owner.

All correspondence relating to the contract shall be addressed to:

Brandon Braziel
JAXPORT
ENGINEERING SERVICES
POST OFFICE BOX 3005
JACKSONVILLE, FL 32206-0005

b. Inspector: The Project Manager may appoint such Inspectors as he desires. They shall be authorized to inspect all work done, and materials furnished. They shall be authorized to call to the attention of Contractor personnel any failure of the Work or materials to conform to the specifications and contract. They shall have the authority to reject nonconforming materials and workman-ship, and construction methods or procedures which produce substandard results and to take appropriate action to avoid any dangerous or unsafe conditions. The presence of the Inspector shall in no way relieve the responsibility of the Contractor to comply with and perform all of the obligations specified in the contract documents. The Inspectors shall not be authorized to approve, direct, or establish any methods or procedures used by the Contractor in constructing the project. The Inspector is not authorized to approve any deviation from the contract documents nor any substitutions of materials or equipment.

c. Approval: Where utilized in this contract, "approval" shall constitute a review by the Owner only to satisfy itself as to the general conformance of the subject as to the intent of the contract. Approval by the Owner does not indicate any responsibility of the Owner towards the design, materials, substitutions, dimensions, fit, function, strength, finish or any other quantity, capacity, or quality of the subject at hand. Approval by the Owner shall not relieve the Contractor from its responsibility for full compliance with the contract requirements, at his sole expense.

d. Work: Where used in these contract documents, the word "Work" shall include all actions, materials, tools, equipment and all appliances, machinery, appurtenances and engineering (when specified), and labor necessary to perform and complete the contract, and such additional items not specifically indicated or described which can be reasonably inferred as belonging to the scope and intent of the contract. The terms "Work" and "Project" shall mean the same and may be used interchangeably.

e. Consultant: Where utilized by the Owner, the consulting firm or firms engaged by the Owner to provide professional services in conjunction with the planning, design, and construction of the Project will interpret the technical specifications and drawings, and will render judgments and decisions on matters of a technical nature as pertains to design and construction of the Project. The terms "Architect," "Architect/Engineer," "A/E," and "Engineer" shall all be construed to refer to the Consultant(s).

f. Contractor: The individual, firm, company or corporation contracting with JAXPORT for performance of Work and/or furnishing of materials for construction of the Project is defined in the contract documents.

g. Certificate of Substantial Completion: A written document representing a mutually agreed upon status of the progress of the Work as described in the contract documents, or a specified part thereof, between the Owner, the Contractor, and the Consultant whereby the Work is sufficiently complete and can be utilized for its intended purpose/ occupancy by the Owner without unreasonable inconvenience. The Owner reserves the right to make the final decision as to the status of the Work in reference to this definition.

2. Contract Documents

a. General: The contract documents shall consist of the bidding documents, contract forms, conditions of the General Conditions, specifications, drawings, all addenda issued prior to the execution of the Agreement, the approved Project construction schedule(s), all amendments, change orders, and Engineer's response to Contractor's "Request for Information (RFI)" of the contract documents relating to construction issued by the Owner's representative. These form the contract, and what is required by any one shall be binding as if required by all. The intention of the contract documents is to include all labor, materials, equipment and other items necessary for the proper execution and completion of the Work so as to result in a fully operational and functional product. Any work, labor, equipment and materials that may reasonably be inferred from the specifications or drawings as being required to produce the intended result shall be supplied whether or not it is specifically called for in the contract documents. The contract Agreement shall be signed in duplicate by the Owner and the Contractor, unless otherwise stated.

b. Governing Law: The terms and conditions of this contract will be governed by the laws of the State of Florida, and venue for any action shall be in Jacksonville, Florida.

c. Conflicts and Discrepancies: The Contractor shall take no advantage of any error or omission which he might discover in the plans or specifications but shall, within 5 working days, notify the Owner of such discovery, who will then make such corrections and interpretations as it deems necessary for reflecting the actual spirit and intent of the plans and specifications. Failure to make notice within 5 days to Owner by the Contractor will result in work performed at Contractor's own risk and Owner will have no liability for any claim resulting therefore.

The Owner, after receipt of written notice by the Contractor in resolving conflicts, errors, and discrepancies between the various contract documents generally, will give precedence in the following order:

- Approved Change Orders
- Addenda issued prior to receipt of bids
- The executed Agreement Form
- Owner's response to Contractor's Request for Information (Form RFI)
- Supplemental Instructions to Bidders
- Special Conditions of the specifications
- General Conditions of the specifications
- Technical specifications
- Drawings
- Other documents as listed on the Agreement between Owner and Contractor, Form FA
- Bid

Figure dimensions on drawings shall govern over scale dimensions, and detailed drawings shall govern over general drawings.

3. Subcontracting or Assigning of Contract

a. The Contractor shall not subcontract more than 25 percent of the total value of jobsite Work, exclusive of the cost of all installed materials and equipment, without the prior written approval of the Owner. Qualifications of subcontractors may be required in the same manner as provided for the Contractor elsewhere in this contract (see "Instructions to Bidders").

b. The Contractor agrees that it shall not subcontract, assign, delegate, or otherwise dispose of the contract, the duties to be performed under the contract, or the monies to become due under the contract without the Owner's prior written consent.

c. Contracts between the Contractor and subcontractors or suppliers shall be in accordance with the terms of this agreement as applicable.

d. Subcontracted work volume may reflect the SEB Participation goals described in the "Instructions to Bidders".

4. Separate Contracts

The Owner reserves the right to let other contractors perform work without conflict on the same or adjacent property. The Contractor shall cooperate and coordinate with any such other contractor(s).

5. Non-discrimination Provisions

The Contractor, upon execution of the Project agreement, certifies that it meets and agrees to the following provisions:

a. The Contractor agrees that it will not discriminate against any employee or applicant for employment because of race, color, religion, sex, national origin, marital status or disability nor will it discriminate in hiring nor fail to make reasonable accommodation for qualified handicapped employees.

b. The Contractor agrees to comply with all applicable federal, state and local laws, including the Civil Rights Act 1964, as amended. The Equal Employment Opportunity Clause in Section 202, Paragraphs 1 through 7 of Executive Order 11246, as amended, relative to Equal Employment and the implementing rules and regulations of the Office of Federal Contract Compliance Programs are incorporated herein by specific reference. The Affirmative Action Clause in Section 503 of the Rehabilitation Act of 1973, as amended, relative to Equal Opportunity for the Disabled is incorporated herein by specific reference. The Affirmative Action Clause in 38 U.S.C. Section 2-12 of the Vietnam Veterans' Readjustment Assistance Act of 1974, relative to Equal Employment Opportunity for the special disabled veteran and veterans of the Vietnam era, is incorporated herein by specific reference.

c. An entity or affiliate who has been placed on the State of Florida's discriminatory vendor list may not submit a bid on a contract to provide any goods or services to a public entity, may not submit a bid on a contract with a public entity for the construction or repair of a public building or public work, may not submit bids on leases of real property to a public entity, may not be awarded or perform work as a contractor, supplier, subcontractor, or consultant under a contract with any public entity, and may not transact business with any public entity.

   To view a current list, visit: http://dms.myflorida.com/business_operations/state_purchasing/vendor_information/convicted_suspended_discriminatory_complaints_vendor_lists

d. The Contractor agrees that if any of the obligations of this contract are to be performed by a subcontractor, the provisions of this Section I.5 shall be incorporated into and become a part of the subcontract.

6. Wage and Employment Laws

a. The Contractor shall observe and comply with Federal, State, and local laws

relating to wages, rates of pay, and employment requirements, including applicable E.E.O. and Affirmative Action requirements.

b. ARTICLE 1, SECTION 6, OF THE CONSTITUTION OF THE STATE OF FLORIDA RECOGNIZES THAT THE RIGHTS OF PERSONS TO WORK SHALL NOT BE DENIED ON ACCOUNT OF THE MEMBERSHIP OR NON-MEMBERSHIP IN ANY LABOR UNION OR LABOR ORGANIZATION.

7. Royalties and Patents

The Contractor shall pay all royalties and license fees. The Contractor shall defend all suits or claims for infringement of any patent rights and shall save the Owner harmless from loss on account thereof.

8. Right to Audit

The Contractor agrees to provide JAXPORT or any of their authorized representative's access to any books, documents, papers and records of the Contractor which are directly pertinent to this contract for the purposes of making audits, examinations, excerpts and transcriptions. JAXPORT will also be afforded access to all of the Contractor's records, including but not limited to payroll records, training books, correspondence, instructions, drawings, receipts, vouchers, memoranda and similar data relating to this Contract, and the Contractor will preserve all such records for (3) three years, or for such longer periods a may be required by law, after final payment.

The Contractor agrees to permit any of the foregoing parties to reproduce by any means whatsoever or to copy excerpts and transcriptions as reasonably needed.

SECTION II.: THE WORK

1. Contractor's Responsibility.

a. Until substantial completion or final acceptance of the Work (whichever comes first) by the Owner, the Work shall be under the complete care, custody, and control of the Contractor. The Contractor shall assume all risks of loss during its period of custody.

b. The Contractor shall supervise and direct the Work using its best skill, judgment, and attention. The Contractor shall be solely responsible for all construction means, methods, techniques, sequences and procedures, including implementation of the Contractor's Quality Control Program, the prudent exercise of all reasonable safety precautions, and for coordinating all portions of the Work under the contract to affect a timely completion, and resolving any delay or damages between itself and any other Contractor without involvement of the Owner.

c. Unless otherwise specifically noted, the Contractor shall provide and pay for all labor, materials, equipment, tools, construction equipment and machinery, water, heat, utilities, transportation, and other facilities and services necessary for the proper execution and completion of the Work.

d. The Superintendent shall maintain one complete set of the contract documents including approved shop drawings on the jobsite at all times that Work is underway.

e. The Contractor warrants to the Owner that all materials and equipment incorporated in the Work will be new unless otherwise specified, and that all Work will be of good quality, free from faults and defects, and in conformance with the contract documents. All Work not so conforming to these standards may be considered defective. In the event Work is rejected by the Project Manager, the Contractor shall correct, remove, and/or reconstruct such Work to conform to contract requirements at his sole expense including any testing or engineering costs necessitated thereby.

f. The Contractor shall pay all sales, consumer use, and other similar taxes required by laws and secure all permits, fees, and licenses necessary for the execution of the Work.

g. The Contractor shall promptly give all notices and comply with all laws, ordinances, permits, rules and regulations, order, and any public authority bearing on the performance of the Work, and shall notify the Owner if the drawings and specifications are at variance therewith, failure to do so shall result in Contractor’s responsibility for any losses or damages associated with the work.

h. The Contractor shall be responsible for the acts and omissions of all its employees, all subcontractors, suppliers, agents and employees and all other

persons performing any of the Work under a contract with, or under the supervision of the Contractor.

i. Contractor is required to record daily, the progress of the project and submit electronically in Trimble (TID) E-Builder; daily progress reports to the OWNER including information on the subcontractor's work, and the percentage of completion.

j. Contractor is required to and hereby agrees that it will exert every reasonable and diligent effort to assure that all labor employed by the Contractor and its sub-contractors for Work on the Project shall work in harmony with and be compatible with all other labor being used by building and construction contractors now or hereafter on the site of work covered by this contract.

Contractor further agrees that this requirement will be included in all subcontracts of the subcontractor as well as in the Contractor's own contract provided, however, that this provision shall not be interpreted or enforced so as to deny or abridge on account of membership or non-membership in any labor union or labor organization, the right of any person to work as guaranteed by Article I, Section 6 of the Florida Constitution.

k. Submittal Procedures.

Contractor shall submit each shop drawing Submittal for review electronically in Trimble (TID) E-Builder.

Preliminary Shop Drawing Data: Within 20 days after the Award of the Contract the Contractor shall submit to the Project Manager a complete listing of manufacturers for all items for which shop drawings are to be submitted.

Shop Drawing Submittal Schedule: Within 30 days after the Notice to Proceed, the Contractor shall submit to the Project Manager a complete schedule of shop drawing submittals fixing the respective dates for submission, the beginning of manufacture, testing, and installation of materials, supplies and equipment, noting those submittals critical to the progress schedule.

Submittal Log: Contractor shall provide an accurate updated log of submittals maintained by the Contractor and subject to review by JAXPORT at each scheduled progress meeting.

When reviewed by JAXPORT each of the shop drawings will be identified as having received such review, being so labeled and dated. Shop drawings labeled "REJECTED" will be returned to the Contractor for correction and re-submittal with the required correction indicated on the shop drawing or listed on a "Shop Drawing Review sheet".

If submitted drawings or schedules show a departure or variation from the Contract Requirements which are in the interest of JAXPORT and to be so minor as not to involve a change in Contract Price or time for performance, JAXPORT may return the reviewed drawings without noting an exception.

Re-submittals will be handled in the same manner as first submittals. On re-submittals, the Contractor shall direct specific attention on the transmittal and on re-submitted shop drawings to revisions other than the corrections requested by the Project Manager on previous submissions. The Contractor shall make any corrections required by the Project Manager.

The Project Manager and JAXPORT'S Engineer of Record will review a Submittal/re-submittal a maximum of two (2) times after which the cost of review will be borne by the Contractor at JAXPORT'S Project Manager and Engineer of Record's standard hourly rate. No partial submittals will be reviewed. Submittals not complete will be returned to the Contractor, and will be considered "Rejected" until properly resubmitted.

Contractor shall submit a minimum of six (6) sets, plus additional sets as required by his Subcontractors, of each shop drawing Submittal for review.

If catalog sheets or prints of manufacturers' standard drawings are submitted as Shop Drawings, any additional information or changes on such drawings shall be typewritten or lettered in ink.

The minimum size for shop drawings shall be 11" X 17". Each shop drawing shall be clear, thoroughly detailed and shall have listed on it all Contract Documents references, drawing number(s), specification section number(s) and the shop drawing numbers of related work. Shop drawings must be complete in every detail, including location of the Work. Materials, gauges, methods of fastening and spacing of fastenings, connections with other work, cutting, fitting, drilling and any and all other necessary information per standard trade practices or as required for any specific purpose shall be shown.

Where professional calculations and/or certification of performance criteria of materials, systems, and or equipment are required, the Project Manager is entitled to rely upon the accuracy and completeness of such calculations and certifications submitted by the Contractor. Calculations, when required, shall be submitted in a neat clear and easy format to follow.

Contractor shall keep one set of Shop Drawings marked with Project Manager's and/or Engineer of Record's approval at the job site at all times.

l. Shop Drawings and Samples.

(1) The Contractor shall furnish all samples and shop drawings as required for approval by the Owner. Details, number of copies required, and format will be mutually agreed upon at the Preconstruction Conference.

(2) Approval of shop drawings, samples, materials, substitutions, or equipment deviating in any dimension, fit, strength, finish, capacity, or other quality shall not relieve the Contractor from full compliance with the contract requirements, at its sole expense, unless such exceptions, deviations, dimensions, substitutions, etc. are specifically identified and marked for attention on the shop drawing submittals and signed by the Contractor at time of submission. Approval of such specifically marked shop drawings shall permit the altered or substituted Work provided that any change in the contract price occasioned thereby is accomplished per Section III, "General Conditions". The Contractor shall bear full responsibility for coordinating proposed deviations, substitutions, dimensional changes and the like with all other affected trades, and for the full cost of any other subsequent modifications or changes to the Work necessitated thereby.

(3) The Contractor and if applicable, the Subcontractor(s) shall thoroughly check, coordinate, stamp, sign and approve all shop drawings prior to submittal to the Owner for review. If it appears to the Project Manager that such review, coordination, and approval has not been done or is not adequate, the shop drawings will be returned to the Contractor without action. The Contractor shall bear the sole responsibility for performance of Work or ordering requiring shop drawing approval, in advance of such approval.

(4) THE CONTRACTOR SHALL BEAR THE SOLE RESPONSIBILITY FOR ANY DELAYS TO THE WORK OCCASIONED BY OR RESULTING FROM ITSELF OR ITS AGENTS, SUBCONTRACTORS, SUPPLIERS, OR EMPLOYEES' DELAY OR FAILURE TO FURNISH COMPLETE, CORRECT, COORDINATED SHOP DRAWINGS IN A TIMELY MANNER. DELAYS INCURRED DUE TO REJECTION OF INCOMPLETE AND/OR NON-CONFORMING SHOP DRAWINGS SHALL BE SOLELY THE RESPONSIBILITY OF THE CONTRACTOR, AND NO ADDITIONAL CONTRACT COST OR TIME SHALL BE ALLOWED ON ACCOUNT OF SUCH DELAYS.

m. The Owner will furnish such information as is available at the time of contract award as to control points, benchmarks, recent surveys, or soundings concerning the worksite, and adjacent facilities, utilities, or structures. The Contractor, not the Owner, shall be responsible for any and all verifications required, extensions of survey control for the Work, ancillary surveying, location of centerlines, baselines, additional benchmarks, and any other measurements necessary for construction or design purposes, as appropriate.

Any markers or stakes set by the Owner or its representatives for control, inspection, or reference purposes during construction shall be preserved and left intact and undisturbed by the Contractor, unless in the way of construction. Prior to removal or relocation of any such marker by the Contractor, when necessary, the Contractor shall so inform the Owner's representative at the jobsite. Any such markers negligently destroyed or

disturbed by the Contractor shall be restored at his expense.

2. Execution of the Work.

a. General. The Contractor shall preserve and protect from damage all property along the line of work, or which is in the vicinity of, or is in any way affected by the Work, the removal or destruction of which is not called for by the plans. This applies, but is not necessarily limited to public and private property, public and private utilities, trees, shrubs, signs, monuments, fences, guardrails, pipe and underground structures, wharves, railroads, bridges, roadways (except natural wear and tear resulting from legitimate use thereof by the Contractor etc.), and whenever such property is damaged due to the activities of the Contractor, it shall be immediately restored to a condition similar or equal to that existing before such damage or injury was done by the Contractor, and at his own expense, or he shall make good such damage or injury in a manner acceptable to the Owner. In case of failure on the part of the Contractor to restore such property or to make good such damage or injury, the Owner may upon 48 hours' notice proceed to repair, rebuild or otherwise restore such property as may be deemed necessary, and the cost thereof will be deducted from any monies due or which may become due the Contractor under the contract.

b. Superintendence. The Contractor shall provide a qualified Superintendent on the Work throughout its progress, and shall specifically require that the Superintendent be present on the site at all times when any Work is being performed by itself or any of its subcontractors. Qualified Superintendent shall have a minimum of 10 years of construction experience, five of which are on similar projects in that capacity. All communications given to the Superintendent shall be as binding as if given to the Contractor. Once assigned, the Contractor's Superintendent shall not be replaced without prior written notice to the Owner. The Owner reserves the right to reject the assignment or reassignment of the Contractor's Superintendent. The Superintendent shall have full authority to execute the orders or directions of the Project Manager and to obtain or supply promptly any materials, tools, equipment, labor, and incidentals which may be required. The Contractor must provide on-site supervision at all times when work is being done. If, in the event that it is absolutely necessary for the Superintendent to be absent from the site, the Contractor shall notify the Project Manager, in writing, the assignment of the person on-site who will act in its place and be responsible for the project. This person must be an employee of the Contractor. Such superintendence shall be furnished regardless of the amount of Work sublet.

c. Design Engineering. Where design engineering is the responsibility of the Contractor, the Contractor must assure that the engineer who certifies the design is appropriately authorized to do so according to the regulations and laws of the local community and the State of Florida.

d. The Contractor shall have a responsible person available reasonably near the worksite and "on-call" on a 24-hour basis, 7 days a week; in order that it may be contacted in emergencies and in cases where immediate action must be taken to maintain traffic or to handle any other problem that might arise. The designated individual shall have full authority to take actions necessary to resolve such situations as previously described. For compliance with this requirement the furnishing of a local telephone number (non-toll) where such person can be directly reached will suffice.

e. Except in the interest of safety or protection of persons, or the Work, or property at the site or adjacent thereto, and except as may otherwise be indicated in the "Special Conditions", all Work at the site shall be performed during regular working hours, and Contractor shall not permit overtime Work or the performance of Work on Saturday, Sunday, or any legal holiday without Owner's consent given after prior written notice to Owner's Project Manager. In general, all Work shall be performed during daylight hours. For special operations, night Work may be done if so authorized in writing. No night Work shall be performed unless adequate artificial lighting has been provided and has been approved by the Inspector.

f. The Contractor shall not begin new items of Work to the prejudice of Work already started. The Owner may require the Contractor to finish a section or area on which Work is in progress before Work is started on an unrelated or additional section or area, unless the Contractor can clearly demonstrate to the Project Manager on a sound, rational, and convincing basis that its intended action is in the best interest of the Project.

g. The Contractor shall at all times conduct the Work in such a manner and in such sequence as to insure the least practicable interference with traffic. The Contractor's vehicles and other equipment shall be operated in such a manner that they will not be a hazard or hindrance to the public. Materials stored on the worksite shall be placed so as to cause as little obstruction as possible.

h. The Contractor shall arrange his work and dispose of his materials so as not to interfere with the operations of other contractors engaged upon adjacent work, and to join his work to that of others in a proper manner in accordance with the spirit of the plans and specifications, and to perform his work in the proper sequence in relation to that of other contractors, all as may be directed by the Owner. Each contractor will be held responsible directly to the Owner or any other contractor for any damage done by him, his agents, or his subcontractors to the work performed by another contractor. The Owner shall not be liable for damages caused between contractors.

i. The Contractor shall so conduct his operations and maintain the Work in such condition that adequate drainage will be in effect at all times. Existing functioning storm sewers, gutters, ditches, and other run-off facilities shall not be unnecessarily obstructed.

j. Heavy equipment shall not be operated close enough to new or previously existing structures to cause damage, disturbance or displacement.

k. The Contractor shall provide qualified and acceptable personnel to organize, schedule, manage, layout, and construct the Work as required by the contract documents and shall assure that all Project executives, superintendents, and foremen employed by it on this Project are competent, knowledgeable in the Work, conscientious, attentive to the Project, and reliable. All workers must have sufficient skills and experience to properly perform the work assigned them. Welder qualification records will be furnished by the Contractor at no cost to the Owner. All workers engaged on specialty work or detailed (highly skilled) work, or in any recognized trade shall have had sufficient experience in such work to perform it properly and satisfactorily and to operate the equipment involved, and shall make due and proper effort to execute the Work in the manner prescribed in the specifications, or the Owner may take appropriate action as prescribed below.

The Contractor shall at all times maintain good discipline and order at the site. Whenever the Project Manager has determined that any person employed by the Contractor is incompetent, unfaithful, malevolent, intemperate, disorderly or insubordinate, such person shall, upon notice to the Contractor's Superintendent, be promptly removed from the Work and shall not again be employed on it except with the written consent of the Project Manager. Should the Contractor upon due notice fail to remove such person or persons, the Owner may withhold all monies which are or may become due to the Contractor, or may suspend the Work until such orders to remove said person or persons have been accomplished as set forth in Article 8(i). The Contractor shall protect, defend, indemnify and hold the Owner, its agents, officials, and employees harmless from any and all claims, actions or suits arising from such removal, discharge, or suspension of unsuitable employees of the Contractor.

l. The Contractor shall at all times keep the premises free from accumulation of waste materials and rubbish caused by the Work, and at the completion of the Work shall remove all rubbish, waste, salvage and surplus materials which resulted from the Work. The Contractor shall also remove all tools, construction equipment and machinery and shall leave the Project "broom clean", unless otherwise specified. All surplus and salvage material shall become the property of the Contractor unless otherwise specified in the contract documents.

m. The Owner shall have the authority to suspend the Work wholly, or in part, for such period or periods as may be deemed necessary due to unsuitable weather or other conditions which are considered unfavorable for the prosecution of the Work; to accommodate actions, or for such time as is necessary due to the failure on the part of the Contractor to carry out orders given, or to comply with any or all provisions of the contract. Such suspension shall be ordered in writing by the Project Manager giving the

Contractor, in detail, the reasons for the suspension and under what circumstances or conditions the Work may be permitted to resume.

Whenever the Work is suspended by the Owner for reasons other than the fault of the Contractor, an extension of time for completion of the Work due to such suspension may be made as allowed for in other sections of this contract.

Time extension shall be the Contractor's sole remedy unless otherwise agreed upon in writing prior to the commencement of work.

n. The Contractor shall not suspend operations or remove equipment or materials necessary for the completion of the Work without the prior permission of the Owner.

o. Cooperation with Port Operations.

(1) The Contractor understands that the Work will be performed on, or in the near vicinity of an operating marine terminal. The Contractor acknowledges that ship schedules and terminal operations take precedence over the Contractor's activities. Contractor shall provide upon request, manpower and equipment loading schedule for the project.

(2) The Owner will, insofar as possible, schedule berthing of ships, and general terminal operations, so as not to interfere with the Work of the Contractor. The Owner will review the schedule presented by the Contractor at the Preconstruction Conference and advise the Contractor of any known conflicts that may exist with terminal operations. The Contractor shall adjust its schedule to avoid those conflicts and ensure that its activities will not interfere or cause interference with terminal operations, at no cost to the Owner.

(3) Considering that ship schedules are not precise due to weather and delays at other ports, the Contractor will be notified a minimum of 24 hours prior to the expected arrival of a ship that will be berthed in, or affect the area of the Contractor's Work. The Contractor may be required to curtail its activities in the area affected to the satisfaction of the Project Manager until the construction site is available again at no cost to the Owner.

(4) The Contractor's Superintendent, however, during the course of the Work, shall contact the Terminal Director designee by telephone or personal contact, twice each day (early morning and late afternoon) concerning ship traffic schedules and cargo handling activities so as to minimize Contractor's "downtime" and improve his scheduling efforts.

(5) When the Work is stopped by the Authority for its convenience, or vessels are berthed in locations so as to impede the Contractor's Work, the total number of calendar days of delay shall be added to the time allowed for the completion of the Project which shall be the sole remedy available to the Contractor.

(6) When it is necessary that a change or interruption be made in terminal operations in order to carry out a construction operation, the Contractor shall submit a request electronically in Trimble (TID) E-Builder with full details including a pre-approved schedule at least 72 hours prior to the time the change or interruption is required. The Owner shall make all reasonable efforts to comply with the request of the Contractor. The Contractor shall not proceed with such Work until it has received written notice from the Owner to so proceed.

p. Failure of Contractor to Maintain Satisfactory Progress.

(1) Time is of the essence in this contract, and as delay in the prosecution of the Work will adversely impact the Owner's business, it is important that the Work be prosecuted to completion. Moreover, the cost to the Owner for the administration of the contract, including engineering, inspection, and supervision, will be increased as the construction period is lengthened.

(2) The Contractor may be declared delinquent because of unsatisfactory progress under this contract when the contract time allowed has not been entirely consumed, but the Contractor's progress at any check period does not meet at least one of the following two tests:

(a) The percentage of dollar value of completed Work with respect to the total amount of the contract is within 15 percentage points of the percentage of contract time elapsed.

(b) The percentage of dollar value of completed Work is within 15 percentage points of the dollar value which should have been performed according to the Contractor's own progress schedule previously approved by the Owner.

(3) The Contractor will be declared delinquent because of unsatisfactory progress under this contract should either of the following circumstances occur:

(a) The contract time allowed has been consumed and the Work has not been completed.

(b) The contract time allowed has not been entirely consumed, but the Contractor’s progress at any check period does not meet either of the two tests described under Sub-article (2) above.

(4) A Contractor determined delinquent will be disqualified from further bidding by the Director of Procurement and also will not be approved as a subcontractor so long as the delinquency status exists. Also, any individual, firm, partnership or corporation affiliated with a delinquent Contractor to the extent that it is dependent upon the delinquent Contractor for either personnel, equipment, or finances shall likewise be disqualified. The Owner additionally reserves all rights and options pertaining to available legal remedies for such delinquency. A Contractor disqualified under the requirements of this Article will be

removed from a delinquent status upon receipt of satisfactory evidence by the Owner's Project Manager and approval of Procurement that its progress is no longer delinquent, provided the contract time has not lapsed.

(5) The principal progress verification will occur monthly and will generally coincide with receipt by the Owner's Project Manager of the Contractor's monthly Application for Payment and Work Progress Schedule.

(6) Preliminary notices of delinquency will be sent to the Contractor by facsimile mail immediately thereafter, and confirmed by certified mail. The Contractor, once given such a preliminary notice of delinquency, will not be finally declared delinquent until a period of 10 calendar days after the preliminary notice has elapsed. During this 10-day period, the affected Contractor may request an extension of time or present other considerations that would affect its delinquency to which it feels it is entitled. Final notification of delinquency will be made by certified mail after the expiration of this 10-day period provided no extensions of time or other considerations are deemed proper by the Owner, and provided the delinquency status has not been corrected. Contractor shall provide an acceptable recovery schedule to Owner for approval.

Owner's failure to terminate for delinquency shall not serve as a waiver by the Owner.

(7) The Owner may grant extensions of time during the prosecution of the Work, as allowed under the contract provisions regardless of the Contractor's delinquency status. The contract will be considered complete when all Work has been completed and accepted by the Owner, and final payment has been issued to the Contractor.

3. Substantial Completion

The Substantial Completion, as defined in the "Definitions" of Section I.1. g, will be initiated in writing by the Contractor and/or the Owner for the purpose of making available the stated Work, or a specified part thereof, for its intended use. The Owner and the Contractor will conduct an inspection of the stated Work for compliance with the contract documents. The Owner will have prepared a written Punch List of all items and/or the deficiencies for the Work covered by the Certificate of Substantial Completion, the Punch List shall also include an estimated cost to complete each item on the list. The Owner and Contractor shall collectively review the Punch List and estimated costs within 30 calendar days (may be extended to 45 calendar days for projects with an estimated cost of $10 million or more) of reaching substantial completion and use all reasonable effort to mutually agree on the Punch List and associated estimated costs. If there is a good faith dispute as to the Punch List and estimated costs, Owner reserves the right to retain any amounts required to complete the Punch List at its discretion, in

compliance with Florida Statutes. The Punch List shall become a part of the Certificate of Substantial Completion and must be completed prior to final acceptance of the Work. If the Owner agrees that the Work is ready for occupancy, a Certificate of Substantial Completion will be prepared by the Owner on the form included in the contract documents. The Statement shall be completed in its entirety and shall be signed by the Engineer, Contractor, Tenant and Owner, where applicable. The Owner and Contractor agree to work cooperatively in the event the Punch List must be supplemented based on the disclosure of defective or incomplete work.

4. Tests and Inspections

a. Except as specifically stated in writing by the Owner, the Contractor shall establish and conduct its own quality testing program for materials and other Work performed thereon under this contract. Testing may include but not be limited to soils, aggregates, compaction, masonry, concrete, asphalt, painting, metals, pressure tests, welding, coatings, insulation, water quality, electrical circuitry, machinery, equipment or other applicable items. The Contractor shall, prior to the Preconstruction Conference, furnish electronically in Trimble (TID) E-Builder to the Owner a listing or schedule of testing it proposes to conduct for informational purposes. Results of such tests as performed by the Contractor shall be furnished electronically in Trimble (TID) E-Builder to the Owner within 48 hours of such testing, for information. No separate payment will be made by the Owner for any testing accomplished by the Contractor but the cost thereof will be considered as included in the overall contract price for the related items of Work.

b. The Owner may employ, at its expense, an independent testing laboratory for the purpose of performing such tests as may be deemed necessary by the Owner.

   If any Work or materials are found to be deficient as a result of such tests, the Contractor shall promptly correct same, or replace, in accordance with the specifications, and it may be required to revise and upgrade both construction and quality control procedures. If the Owner deems it necessary that additional testing shall be made of such correction or replacement, the Contractor shall pay the costs thereof.

c. The Owner reserves the right to inspect any and all parts of the Work underway for conformance with the contract requirements. The making of tests by the Contractor, regardless of their indication, shall not relieve the Contractor of sole responsibility for Work that is defective or not in accordance with the requirements of the contract.

d. Should the cost of remediation of deficient work be commercially wasteful, the Owner at its sole option may retain the nonconforming work for no cost to the Owner for that work.

5. Time

a. All time limits stated in the contract documents shall be consecutive calendar days unless otherwise stated.

b. The contract completion time shall be as shown in the "Special Conditions". Timely completion is an essential element of this contract. Prevailing conditions of weather and environment at the worksite and the Owner's continuing port operations in the vicinity have been taken into account in establishing the contract time allowed for the Work.

c. The Notice to Proceed will not be given until after receipt of evidence of insurance (in the manner specified) and contract bonds, and following the Preconstruction Conference. If the Preconstruction Conference is waived by the Owner, the Notice to Proceed will be issued immediately upon receipt of the required bonds and certificates by the Owner.

6. Warranties and Guarantees.

a. The Contractor shall correct any Work that fails to conform to the requirements of the contract documents where such failure to conform appears during the progress of the Work, and shall remedy any defects due to faulty materials, equipment or workmanship which appears within the warranty period. The Warranty Period is as specified in the "Special Conditions", unless the Technical Specifications require a longer warranty period for all or portions of the Work. The provisions of this condition apply to work done by subcontractors, as well as to work done by direct employees of the Contractor. The Contractor shall insure that its subcontractors/suppliers are bound by this requirement.

b. The Contractor shall furnish all written warranties/guarantees for any materials or equipment electronically in Trimble (TID) E-Builder, which are required under this contract, or separately warranted by the manufacturers. Final payment shall be withheld from the Contractor until all warranty documents have been furnished to the Owner. All warranties shall be issued consistent with the requirements of these contract documents.

SECTION III.: CHANGES AND DISPUTES

1. Changed Conditions.

The Contractor shall promptly and before such conditions are disturbed, notify the Owner in writing of: a) subsurface or latent physical conditions at the site differing materially from those indicated in the contract documents, b) previously unknown physical conditions at the site of an unusual nature, differing materially from those ordinarily encountered and generally recognized as inherent in Work of the character provided for in this contract, or c) underground utilities or other obstructions not shown on the plans or reasonably expected to exist in the way of the Work at such location(s).

Notification shall be within 5 calendar days of discovery by the contractor. The Owner shall promptly investigate the conditions, and if it finds that such conditions do so materially differ and cause an increase or decrease in the Contractor's cost of, or the time required for performance of this contract, an equitable adjustment may be made, and the contract modified in writing accordingly by Change Order. Any claim by the Contractor for adjustment under this clause shall not be allowed unless timely notification has been made by the Contractor, or unless the Owner has granted a further period of time for determination of the extent of delay, magnitude of changed conditions, or determination of corrective action required.

2. Changes in the Work.

a. Change Orders - General. JAXPORT does not anticipate the issuance of Change Orders to the contract. The Contractor should not anticipate Change Orders; nor view any Change Orders that should occur as the opportunity for windfall profit. The Owner may authorize changes in the work consisting of additions, deletions or modifications to scope or schedule and the contract price or time (or both) being adjusted accordingly. All such changes in the Work shall be authorized by a written Change Order which shall document the change and specify any contract modifications such as price or schedule. No changes to the Work are authorized until the Contractor and the Owner have executed a formal Change Order. Verbal instructions do not constitute a Change Order.

(1) Either the Owner or the Contractor may initiate a Change Order request. In either event, the Contractor shall promptly prepare and submit electronically in Trimble (TID) E-Builder to the Owner a detailed justification for the Change Order request (when initiated by the Contractor) and a detailed quotation for the changed work, both time and money. The detailed quotation shall be complete and definitive as to the true costs of the changed work. The Owner will also require a complete breakdown of all costs that will be experienced by Contractor and all sub-tier contractors. Single line statements are not acceptable. The breakdown of costs may include, but are not limited to:

- Labor Hours (broken down by craft)
- Materials (broken down by units)
- Equipment (broken down by units)
- Transportation (specify)
- Supervision (specify)
- Taxes (specify)
- Permits (specify)
- Insurance and Bonding (specify)
- Mobilization (show detail of cost)
- Demobilization (show detail of cost)
- Any other information requested by the Owner
- Mark-up for Profit and Overhead (see Section III 2.a.2.)

The breakdown of time shall include a thorough justification for any extension of the contract completion date which may include a time impact analysis, if requested by the Owner. Only those items of Work that directly affect the "critical path" of the Project will be considered for time extension.

Additional equipment costs on change orders: For any machinery or special equipment (other than Small tools), including fuel and lubricant, the Contractor will receive 80% of the "Rental Rate Equipment Watch or an amount less than" for the actual time that such equipment is in operation on the work, and 40% of the "Rental Rate Equipment Watch or an amount less than" for the time the equipment is directed to standby and remain on the project site, to be calculated as indicated below. The equipment rates will be based on the latest edition (as of the date the work to be performed begins) of the "Rental Rate Equipment Watch for Construction Equipment or an amount less than" or the "Rental Rate Equipment Watch for Older Construction Equipment or an amount less than," whichever is applicable, as published by Equipment Watch, Penton Media, Inc. (version current at the time of bid), using all instructions and adjustments contained therein and as modified below. On all projects, the Engineer will adjust the rates using regional adjustments and Rate Adjustment Tables according to the instructions in the Equipment Watch.

Allowable Equipment Rates will be established as set out below:

(1) Allowable Hourly Equipment Rate = Monthly Rate/176 x Adjustment Factors x 80% or an amount less than.

(2) Allowable Hourly Operating Cost = Contractors Documented Cost x 80% or an amount less than.

(3) Allowable Rate per Hour = Rental Rate Equipment Watch Hourly Equipment Rate x 80% + Contractors Hourly Operating Cost or an amount less than.

(4) Standby Rate = Allowable Hourly Equipment Rate x 40% or an

amount less than.

The Monthly Rate is The Basic Machine Rate plus Any Attachments or an amount less than.

Standby rates will apply when equipment is not in operation and is directed by the Engineer to standby at the project site when needed again to complete work and the cost of moving the equipment will exceed the accumulated standby cost. Standby rates will not apply on any day the equipment operates for eight or more hours. Standby payment will be limited to only that number of hours which, when added to the operating time for that day equals eight hours. Standby payment will not be made on days that are not normally considered work days on the project.

JAXPORT will allow for the cost of transporting the equipment to and from the location at which it will be used. If the equipment requires assembly or disassembly for transport, JAXPORT will pay for the time to perform this work at the rate for standby equipment or an amount less than.

Equipment may include vehicles utilized only by Labor, as defined above.

(2) The percentage mark-up for those items listed in Section III, Paragraph 2.a.1. shall be limited to 15 percent. All subcontract costs will be limited to 5 percent mark-up per tier, with a maximum of 10% regardless of the number of tiers.

(3) All submissions of costs shall be in a form that is acceptable for verification by the Owner. Vendor quotations or Purchase Orders shall support material costs. Labor and supervision costs shall be supported by typical certified payroll documents. Equipment costs must be within the norm of published equipment rental rates for the Jacksonville area.

(4) The pricing of Change Orders shall be determined in one of three ways:

(a) For changes in Work for which unit prices were already established in the contract, the established unit prices shall also apply to work performed under the Change Order. Established contract unit prices are all inclusive of costs, overhead and profit and shall not incur any additional mark-up.

(b) Force Account: Upon written directive of the Owner, the Contractor shall perform the work utilizing the "time and materials" method of pricing, under which all costs are auditable and payment to the Contractor will be limited to those actual expenses, plus the mark-ups allowed in Section III. 2.a. (2). The Change Order will be limited to an estimated cost not-to-exceed amount for fiscal control. Should this amount be reached due to unforeseen conditions, an additional Change Order will be

sought.

(c) By agreement of both parties of a lump sum amount for the change to the contract. Determination of the lump sum amount will require submission of a breakdown of costs as detailed in Section III.2.a.(1) and mark-ups applied from Section III. 2.a.(2), and any other information reasonably requested by Owner.

b. Change Order Form. All Change Orders shall be executed on the form approved by JAXPORT. Execution of a Change Order resolves all issues of time and compensation. No other method of reservation of rights shall be recognized.

c. The Contractor shall keep and present in such form as the Owner may direct, a correct and current account of all direct costs of the Work performed. All documentation shall be maintained according to generally accepted accounting practices (GAAP), in such form and detail as to be audited for accuracy and content. JAXPORT'S Project Manager shall periodically check and certify the costs. Payments shall be made to the Contractor based upon the certified costs of the Contractor, with mark-ups, as set forth in Section III.2.a.(2).

d. Bond Liability. Any changes made in the specifications for the work by Change Order (whether such changes increase or decrease the amount thereof) or any change in the manner or time of payments made to the Contractor, or any change in the contract completion date occasioned by changed Work shall not, in any way, annul, release or affect the liability on the bond provided by the Contractor. The Contractor is solely responsible for notification of Surety of any Surety changes.

Notwithstanding the foregoing, it is understood and agreed that the Owner may, at any time, issue written instructions to the Contractor requiring changes within the scope of the work or schedule that are consistent with the general intent of the contract documents, at no extra cost to the Owner.

3. Claims.

a. Claims for Extra Work. If the Contractor considers that any written instructions, acts, or omissions of the Owner or any of the Owner's agents, employees, consultants, contractors, subcontractors or suppliers have caused or will cause the Contractor to incur extra costs or time not included in the contract documents, the Contractor shall give written notice to Owner of such claim within 5 calendar days after the initial date of such acts, omissions, instructions or occurrence, and shall not proceed with the Work until receipt of the Owner's written directive to do so. Upon receipt of such a directive, the Contractor shall proceed in accordance therewith even though agreement may not have been reached as to whether said instructions require work that is within or outside of the scope of the contract documents or, if outside, the amount of the equitable price or time

adjustment to which the Contractor is entitled for the performance thereof. No claim for such extra costs or time shall be allowable in the absence of the written directive of the Owner and the timely written notice by the Contractor. In the absence of either or both, the Contractor's claim for extra costs or time on account thereof shall be deemed to have been waived.

b. Claims for Damages. Should the Contractor suffer injury or damage to any other party because of any act or omission of the other party or of any of its employees, agents, or others for whose acts it is legally liable, claim shall be made in writing to the Owner within 5 calendar days after the first observance of such injury or damage.

(1) Should the "no damages for delay" clause not be enforced by the court, the Contractor waives any claim for extended home office overhead that may result from any delay on the project.

(2) The Contractor specifically waives any right to seek attorney's fees and construction claim preparation costs from the Owner.

(3) The Contractor shall not present nor recover on any claim from the Owner based on any formula(s), hypothetical or statistical methodologies used in damage computation. The Contractor may only recover if it can provide documented pay records specifically indicating any alleged damage, loss, or cost.

4. Completion of Work by Owner

Upon declaration of default, the Owner shall have full power and authority to appropriate and/or use any or all materials and equipment on the site which are suitable and acceptable, and may enter into an agreement with others for the completion of the Work under the contract, or may use other methods which in the opinion of the Project Manager are required for the completion of the Work in an acceptable manner. All costs and charges incurred by the Owner because of the Contractor's default, including the costs of completing the Work under the contract, shall be charged against the Contractor and its Surety. In case the expense so incurred by the Owner is less than the sum which would have been payable under the contract if it had been completed by the defaulting Contractor, the defaulting Contractor shall be entitled to receive the difference.

Owner reserves their right to supplement, with additional workers and equipment, the Contractor’s forces if Contractor is not reasonably projected to complete the project in a safe and timely manner. Owner shall give the Contractor 10 day’s written notice of its intent to utilize supplemental forces. The Contractor shall have the primary responsibility to coordinate all work on the project and shall fully cooperate with all other forces.

In case the expense incurred by the Owner pursuant to this Section exceeds the sum which would otherwise have been payable under the contract, then the Contractor and its Surety shall be liable and shall pay the Owner the amount of the excess.

If, after the 10-day default notification period, and prior to any action by the Owner to otherwise complete the Work under the contract, the Contractor should convincingly establish its intent and ability to prosecute the Work in accordance with the Owner's requirements, the Owner may elect to permit the Contractor to resume the Work in which case any costs to the Owner incurred by the delay or from any reason attributable to the delay will be reimbursed by the Contractor or Surety.

5. Default and Termination

a. If the Contractor fails to begin the Work under the contract promptly upon receipt of the Notice to Proceed, or fails to perform the Work with experienced and effective supervision, sufficient workers, sufficient equipment, or sufficient materials to assure the prompt completion of the contract (i.e., the Contractor is declared delinquent), or performs the Work unsuitably, or neglects or refuses to remove materials or to perform anew such Work as may be rejected as unacceptable and unsuitable, or discontinues the prosecution of the Work, or fails to resume Work which has been discontinued, or becomes insolvent or is declared bankrupt, or files for reorganization under the bankruptcy code, or commits any act of bankruptcy or insolvency, either voluntarily or involuntarily, or allows any final judgment to stand against them unsatisfied for a period of 10 calendar days, or makes an assignment for the benefit of creditors, or fails to comply with contract requirements regarding minimum wage payments, E.E.O. or SEB requirements, or for any other cause whatsoever fails to carry on the Work in an acceptable manner, or if the Surety executing the bond for any reasonable cause becomes unsatisfactory in the opinion of the Owner, the Owner will give notice in writing to the Contractor and its Surety of such delay, neglect, delinquency or default.

b. If the Contractor, within a period of 10 calendar days after written notice of default from the Owner delivered to the Contractor's representative on the jobsite, or by facsimile transmission and confirmed by certified mail, does not proceed to correct the conditions of which complaint is made, the Owner shall, upon written notification from its Project Manager of such delay, neglect, or default and the Contractor's failure to correct such conditions, have full power and authority without breaching the contract to take the prosecution of the Work out of the hands of the Contractor and to declare the contract in default and make demands upon the Surety consistent with the rights set forth in the Performance Bond attached herein.

c. The Owner may, after written notice to the Contractor, terminate the contract or a portion thereof for just cause such as default or for other reasons which are determined to be in the interest of the Owner. Such reasons for termination may include but are not necessarily limited to national defense or national emergency which creates a serious shortage of materials, orders from duly constituted authorities relating to energy conservation, and restraining order or injunctions obtained by third-party

citizen action resulting from national or local environmental protection laws or where the issuance of such order or injunction is primarily caused by acts or omissions of persons or agencies other than the Contractor and unacceptable interference with Operations.

d. When a contract or any portion thereof is terminated before completion of all items of Work in the contract, payment will be made for the actual number of units or items of Work completed at the contract unit price, or as mutually agreed for items of Work partially completed or not started. No claim for loss of anticipated profits shall be allowed and are specifically waived by Contractor.

e. Reimbursement for mobilization expenses (when not otherwise included in the contract) including moving equipment to the job will be considered where the volume of Work completed is too small to compensate the Contractor for these expenses under the contract unit prices; the intent being that an equitable settlement will be made with the Contractor.

f. Acceptable materials procured by the Contractor for the Work that have been inspected, tested, and approved by the Owner, and that are not incorporated in the Work may be purchased from the Contractor at actual cost as shown by receipted bills and actual cost records at such points of delivery as may be designated by the Project Manager.

g. Termination of a contract or a portion thereof under the provisions of this sub-article shall not relieve the Contractor of its responsibilities for the completed portion, nor shall it relieve its Surety of its obligation for and concerning any claims arising out of the Work performed.

h. JAXPORT shall have the absolute right to terminate in whole or part the Contract, with or without cause, at any time after Award upon written notification of such termination.

In the event of termination for convenience, JAXPORT will pay the Company for all disbursements and expenses that the Company has incurred, or those for which it becomes obligated prior to receiving JAXPORT's notice of termination. JAXPORT will also pay the Company costs incurred less the reasonable resale value, of materials or equipment that the Company has already ordered, obtained or fabricated in connection with the Contract.

Upon receipt of such notice of termination, the Company shall stop the performance of the Work hereunder except as may be necessary to carry out such termination and take any other action toward termination of the Work that JAXPORT may reasonably request, including all reasonable efforts to provide for a prompt and efficient transition as directed by JAXPORT.

JAXPORT will have no liability to the Company for any cause whatsoever arising out of, or in connection with, termination including, but not limited to, lost profits, lost opportunities, resulting change in business condition, except as expressly stated within these Contract Documents.

6. Delays and Extensions of Time

In the event that the Contractor, in the performance of the Work, encounters inefficiencies, disruptions, or delays as a result of the partial suspension or resequencing of work thereof, or incidental interference therewith by the Owner or its other contractors, or as a result of other unforeseeable causes beyond the control and without fault or negligence of the Contractor such as, but not limited to, Acts of God, fire, flood, war, governmental priority controls, railcar shortages, general strikes, and labor work stoppages, the Contractor shall notify the Owner in writing within 5 calendar days of the commencement of the delay that he intends to request additional time for contract completion. Such requests for additional time shall be decided by the Owner within 5 working days of receipt of notification and if a time extension is approved, it shall be authorized by Change Order. In the event of a continuing delay having a single cause, notification as above is required, however, a determination by the Owner as to time extension allowed will not be made until the Contractor has submitted electronically in Trimble (TID) E-Builder complete facts as to the reason and total extent of the delay, including such documentation as may be reasonably required by the Owner. No time extension shall be granted for delays occurring more than 5 calendar days before written notification is made to the Owner, and no time extension shall be granted for any delay caused or occasioned by fault, negligence, omission, or failure to timely prosecute the Work, including procurement delays on the part of the Contractor, its agents, suppliers, employees, or subcontractors. The Contractor shall also take immediate action upon incurring such delay to minimize the effects of that delay. The allowability and length of any such time extension shall be determined in writing. In making that determination, no extension of time will be allowed the Contractor for delays encountered in one or more phases of the Work that can be overcome by reasonable readjustments of the Contractor's planned progress on other phases of the Work. Only critical path delays will be recognized for an extension of time. All requests for an equitable time extension shall be accompanied with a time impact analysis.

a. Time extensions may also be allowed on the same terms and conditions as set forth above, in the event that the Contractor over the course of the Work encounters unusually adverse weather in excess of the norm for the locality. The Contractor expressly agrees that in undertaking to complete the Work within the time specified, it has made allowance for all hindrances including adverse weather and delays which might normally be expected to occur in performing the Work. No claims shall be made for money by the Contractor for such hindrances and delays.

b. The Contractor's sole and exclusive remedy for delays and inefficiencies as described herein shall be an equitable extension of time. The Contractor shall not be entitled to any additional compensation or payment for extra costs or damages incurred by them due to hindrances of, or delays to, the progress of the Work. Any claim related to delay shall be in writing and include a time impact analysis.

c. No extensions of time will be granted due to Contractor's failure to protect

the site, materials, or working conditions from adverse weather conditions including, but not limited to site drainage, storage, and temporary enclosures as needed.

d. No extensions of time will be granted due to Contractor's failure to diligently prosecute the contract, including, but not limited to, procurement delays.

e. Under no circumstances shall any claim for additional costs be accepted based upon a hypothetical formula, Means or other estimated costs. All claims shall be presented utilizing discrete data evidencing direct costs to project.

f. Contractor waives any claims for attorney fees and claims consultant costs.

7. Disputes

Except as otherwise provided in this contract, any dispute concerning a question of fact arising under this contract which is not disposed of by agreement with the Project Manager shall be decided by appeal to the Chief Executive Officer of JAXPORT. The Chief Executive Officer shall, within 30 days of receipt of the written appeal, reduce its decision to writing, and mail or otherwise deliver a copy to the Contractor. The 30-day period may be extended in 30-day increments by written order of the Chief Executive Officer, or its designee, when and if it determines that additional studies or investigations are necessary to render a decision. This decision shall be final and conclusive, unless within 30 days after receipt thereof by the Contractor, the Contractor mails or otherwise delivers to the Chief Executive Officer a written appeal addressed to the Chairman of JAXPORT. In connection with the appeal proceeding under this clause, the Contractor shall be given an opportunity to be heard and to offer supportive evidence to its appeal. Pending final decision on the dispute should the project be ongoing, the Contractor shall proceed diligently with the performance of the contract in accordance with the Chief Executive Officer's decision. The decision on the appeal shall be rendered by JAXPORT's Governing Body and shall be final and conclusive unless determined by subsequent judicial review to have been fraudulent, capricious, so grossly erroneous as to imply bad faith, or not supported by any substantial evidence.

Compliance with this process shall be a condition precedent before any litigation can be brought to appeal any decision.

8. Recovery Rights, Subsequent to Final Payment

The Owner reserves the right should an error be discovered in the partial or final Applications for Payment, or should proof of defective Work or materials used by or on the part of the Contractor be discovered after the final payment has been made to claim and recover from the Contractor or its Surety, or both, by process of law, such sums as may be sufficient to correct the error or make good the defects, errors, or omissions in the Work and materials.

All records pertaining to the Project shall be retained by the Contractor for a period of three years from the date of final acceptance of the Project, unless additional time for retention is requested in writing by the Owner. Upon request, all such records shall be made available to the Owner or its representative. For the purpose of this Section, records shall include all books of account, supporting documents, both paper and electronic, and papers deemed necessary by the Owner to assure compliance with the contract provisions, photographs, videos, video tapes and project pictures stored electronically. Contractor shall reasonably cooperate with the Owner in obtaining and reviewing all documentation herein.

SECTION IV.: ADMINISTRATIVE

1. "As-built" Drawings and Equipment Manuals

a. At the completion of the Work under this contract, the Contractor shall prepare and deliver electronically in Trimble (TID) E-Builder to the Owner one complete set of the construction drawings indicating As-built conditions. Final As-built drawings submissions shall consist of:

(1) Adobe Acrobat format (.pdf) – 1 complete set

(2) Latest version of AutoCAD format (.dwg) to include external references

Final payment shall be withheld from the Contractor until acceptable "As-built" drawings are furnished to the Owner.

b. The Contractor shall furnish electronically in Trimble (TID) E-Builder a complete set of operations and maintenance instructions together with the repair parts lists for all mechanical and electrical equipment. Those instructions shall be prepared and published by the manufacturer, and shall be delivered to the Owner prior to the final inspection. Final payment shall be withheld from the Contractor until such documents are furnished to the Owner.

2. Conferences

a. Unless waived by agreement of both parties, a Preconstruction Conference will be held at a mutually convenient time as soon as is practicable following award of this contract; normally, within 21 calendar days thereafter. The Preconstruction Conference shall be attended by responsible representatives of the Owner, and the Contractor and its subcontractors. The Contractor, its subcontractors and its suppliers are expected to be fully familiar with the contract documents and specific Project requirements by the time set for the Preconstruction Conference and the Owner may reasonably presume such notwithstanding paragraph "c" of the "Contract Documents" Section I of these General Conditions. The Contractor shall then present for discussion at the meeting any questions, concerns, discrepancies, need for clarifications and any other significant issues which may in any manner affect the project schedule or its performance of the Work for these issues discussed after the award of contract. Written clarifications and/or interpretations of the contract documents shall be furnished to the Contractor without unreasonable delay. Written "Minutes" of the Preconstruction Conference will be prepared by the Owner, with copies provided to all attendees and which the "Minutes" shall be retained.

The Contractor shall deliver to the Owner at the Preconstruction Conference the specified copies of:

- Schedule of Values (where applicable).

- Quality control program.
- List of project subcontractors.
- List of Contractor's project management team with telephone numbers.
- Identification of major suppliers and/or manufacturers to be used on the project.
- Schedule for, and listing of, shop drawing submittals.
- Other documents as may be required elsewhere in these specifications.

b. The Contractor or Owner may request conferences for other useful purposes at convenient times throughout the contract period. Representatives of all concerned parties shall receive reasonable notice of any such meeting.

3. Payments

Unless otherwise specified in the section of "Special Conditions" and upon receipt electronically in Trimble (TID) E-Builder of the Contractor's Application for Payment (Forms AFP-1 and AFP-2), payment for this Work will be made as follows:

a. Payment will be made once each month in the amount of 95 percent of the value of completed Work, based on contract prices of labor and materials incorporated in the Work and of materials suitably stored at the site thereof for incorporation in the Work, as estimated or approved by the Owner's representative less the aggregate of previous payments. Within twenty (20) business days after the development of the Punch List, as defined above, and after receipt of a proper invoice or payment request, Owner, through the Project Manager, will pay the remaining balance of the contract, including any remaining retainage less an amount equal to 150% of the estimated costs to complete the items on the Punch List. *See* §§ 218.735(7)(e) and 255.077(4), Fla. Stat. Final payment, will be made after closeout of the Work has been satisfactorily completed and all requirements of the contract documents have been fulfilled. Florida Statutes do not require Owner to pay or release any amounts that are subject of a good faith dispute made in writing pursuant to the contract or are the subject of a claim brought pursuant to § 255.05, Florida Statutes.

b. The Contractor shall submit electronically in Trimble (TID) E-Builder to the Project Manager a proposed Schedule of Values of the various portions of the Work, including line item quantities aggregating to the total contract sum, through Trimble (TID) E-Builder and prior to the Preconstruction Conference. This schedule, when approved by the Project Manager, shall be used as a basis for the Contractor's application for payments. The Contractor shall update this schedule each time a Change Order affecting the contract total price is approved. The contract price will be adjusted to provide payment for the actual quantities of unit price items as they are completed and accepted. The following items are required with each AFP:

(1) Form AFP-1 Application for Payment

(2) Form AFP-2 Schedule of Values

(3) Progress Schedule

(4) SEB Form 5

(5) Narrative Report that addresses:

Work Performed

Work Planned

Problems

Open Issues

(6) Photographs (See Section SC, Item 11 for detailed requirements.)

c. Payments may be withheld for failure of the Contractor to comply with the provisions of the contract documents, including but not limited to:

(1) Defective work not remedied.

(2) Failure of the Contractor to make payments properly to subcontractors or for labor, materials, or equipment.

(3) Any delay or damage to another Contractor, upon certification by injured Contractor, of the cause and amount of any said damage.

(4) Unsatisfactory prosecution of the Work by the Contractor.

Payments may also be withheld if claims have been filed or there is reasonable evidence indicating the probable filing thereof, or if Contractor's Surety for this Project so requests in writing.

Withholding of payments is a remedy in addition to all other remedies available to the Owner. Where pursuant to condition (2) of this paragraph, a contractor certifies to the Owner the necessity to withhold progress payments to another contractor, the certifying contractor shall defend, indemnify, and hold harmless the Owner from any and all claims or suits arising from such action, which is discretionary with the Owner.

d. Whenever Mobilization and Demobilization are a part of the bid items, Mobilization will account for and be paid out at sixty percent (60%) and Demobilization will account for and be paid out at forty percent (40%).

e. Whenever any change or combination of changes in the Work results in an increase or decrease in the original estimated contract quantities, and the Work added or eliminated is of the same general character as that shown on the original plans, the Contractor shall accept payment in full at the original contract unit prices for the actual quantities of work done, and no allowance will be made for any loss of anticipated profits because of increases or decreases in quantities provided, however, that any increased or decreased work covered by a Change Order shall be paid for as stipulated therein.

f. Final payment shall not be made until the Contractor has delivered to the

Owner any required submittals, the Certificate of Contract Completion (Form FCC); Consent of Surety to Final Payment (Form CONSUR), including valid Power of Attorney, and SEB Form 5.

g. No payment by the Owner shall be construed to be acceptance of defective Work or improper materials. Contractor warrants and guarantees that title to all work, materials, and equipment covered by any Application for Payment, whether incorporated into the Project or not will pass to the Owner at time of final payment, free and clear of all liens, claims, security interests and encumbrances.

h. Payments will be made within 20 business days after receipt of Contractor's properly documented invoice(s), unless returned for correction of invoice(s), or submission of additional substantiation.

i. The acceptance of final payment shall constitute a waiver of all claims by the Contractor except those specifically preserved according to the provisions of these contract documents.

j. The Owner may at any time have access to the Contractor's records for the purpose of auditing the financial and contractual performance of the Contractor. The Owner may obtain copies of all financial and scheduling computer disks at any time from the Contractor, and shall have reasonable access to all other documents except those that would be privileged under Florida law. The Owner may audit the financial records of the Contractor at any reasonable time, at its own expense.

4. Progress Schedule

The Contractor shall prepare for the Owner's approval a progress schedule for the Project showing the dates for the starting and completion of the various items of construction. The schedule shall be prepared in Microsoft Project (or equivalent) format, unless the Technical Specifications provide for a more detailed progress schedule.

Four (4) copies shall be furnished to the Owner's representative at the Preconstruction Conference. This schedule, after approval, shall be used by the Owner as the primary means of determining satisfactory execution of the Work by the Contractor. No payments will be made to the Contractor until the schedule is approved. All proposed Change Orders will include a revised schedule.

Should the Contractor fall behind the approved schedule, it shall provide a recovery schedule and be required to revise methods or operations, increase its forces (labor and equipment), work extra hours per day, and/or work extra days per week as necessary until the scheduled progress is acceptable, at no extra compensation by the Owner. Failure on the part of the Contractor to take necessary and sufficient actions in this regard and to put the Project back on schedule within a reasonable time, not to exceed 30 calendar days after notification by the Owner of such delinquency, shall be considered sufficient grounds for termination of the contract. The decision by the Owner not to

terminate shall not constitute a waiver or preclude the termination for default as appropriate.

Any delays encountered during the construction which may be excusable under the provisions of these "General Conditions" shall be brought to the Project Manager's attention in accordance with the provisions. The approved Project schedule may, depending on the Project Manager's decision, be adjusted accordingly.

SECTION V.: INSURANCE AND BOND - Refer to MC-2132 for "Required Limits of Insurance" pages RLI-1 TO RLI-3

1. Insurance and Indemnification.

a. The Contractor shall not commence Work until the Contractor has procured the insurance required under this Section and such insurance has been approved by the Owner. The Contractor shall provide evidence of such insurance in the following manner:

(1) Contractor agrees, at its sole expense, to maintain on a primary, non-contributory basis during the life of this Contract or performance of Work hereunder, insurance coverages, limits, and endorsements unless otherwise noted herein. Contractor agrees to provide evidence of Commercial General Liability, Contractor's Professional Errors and Omissions Liability and Commercial Umbrella/Excess Liability coverages at execution of the Contract. The other coverages required herein for Business Auto Liability, Contractor's Pollution Legal Liability, Inland Marine Builder's Risk Insurance, and Workers' Compensation. In the event the Contractor performs any site work, other than testing, then all insurance required herein will need to be evidenced prior to commencement of said site work.

(2) The Contractor agrees the insurance requirements herein as well as JAXPORT's review or acknowledgement, is not intended to and shall not in any manner limit or qualify the liabilities and obligations assumed by the Contractor under this Contract.

(3) As evidence of compliance with the insurance required by Paragraph "c.", Subparagraphs 1 (Workers' Compensation/Employers' Liability), 2 (Commercial General Liability) and 3 (Business Auto) below, the Contractor shall furnish the Owner with a Certificate of Insurance Compliance (Form 101-87) signed by an authorized representative of the insurer(s) providing the coverage. The specified form must be used; no substitutions will be permitted.

(4) As evidence of compliance with the insurance required by Paragraph "c.", Subparagraph 4 (Protection for Owner) below, the Contractor shall furnish the Owner with either the original of the Owner's and Contractor's Protection Liability Policy(ies) or a Certificate of Insurance Compliance (Form 101-87) signed by an authorized representative of the insurer(s) verifying inclusion of the Additional Insured endorsement in the Commercial General Liability Coverage.

(5) If this contract includes construction of, or additions to aboveground buildings or structures, or the installation of machinery or equipment into an existing structure as evidence of compliance with the insurance required by Paragraph "c.", Subparagraph 5 (property insurance)

below, the Contractor shall furnish the Owner with the original of the policy or policies of insurance required and a Certificate of Insurance Compliance (Form 101-87) signed by an authorized representative of the insurer(s).

(6) With respect only to the insurance required by Paragraph "c.", Subparagraph 4 (Protection for Owner) and Subparagraph 5 (property insurance) below, and then only for a maximum of sixty (60) days from the date of inception of the policy or policies in lieu of the original of any required policy or policies of insurance, the Contractor may furnish an original binder or binders of the insurance signed by an authorized representative of the insurer(s) and a Certificate of Insurance Compliance (Form 101-87) signed by an authorized representative of the insurer(s).

(7) Until such time as the insurance is no longer required to be maintained by the Contractor, the Contractor shall provide the Owner with renewal or replacement evidence of the insurance in the manner described by Paragraph "a.", Subparagraphs 1, 2, 3 and 4 below, no less than thirty (30) days before the expiration or replacement of the insurance for which previous evidence of insurance has been provided.

(8) Neither approval by the Owner for failure to disapprove the insurance furnished by the Contractor shall relieve the Contractor of the Contractor's full responsibility to provide the insurance as required by this contract.

b. Insurers providing the insurance required by this contract must meet the following minimum requirements:

(1) Such insurers must be licensed to write insurance of the required class(es) in the State of Florida, either: a) authorized by subsisting certificates of authority issued to the companies by the Department of Insurance of the State of Florida, or b) with respect only to the coverage required by Paragraph "c.", Subparagraph 1 (Workers' Compensation/Employers Liability) authorized as a group self-insurer pursuant to Florida Statutes 440.57.

(2) In addition, such insurers other than those authorized by Florida Statutes 440.57 shall have and maintain throughout the period for which coverage is required a Best's Rating of "A-" or better and a Financial Size Category of "VII" or better according to A. M. Best Company.

(3) If, during the period when an insurer is providing the insurance required by this contract, an insurer shall fail to comply with the foregoing minimum requirements, as soon as the Contractor has knowledge of any such failure, the Contractor shall immediately notify the Owner and immediately replace the insurance provided by the insurer, with an insurer meeting the requirements. Until the Contractor has replaced the unacceptable insurer with an insurer

acceptable to the Owner, the Contractor shall be in default of this contract.

c. Without limiting any of the other obligations or liabilities of the Contractor, the Contractor shall, at the Contractor's sole expense, procure, maintain and keep in force the amounts and types of insurance conforming to the minimum requirements set forth in this Paragraph "c." Except as otherwise specified in this contract, the insurance shall commence prior to the commencement of work by the Contractor and shall be maintained in force until the contract completion date.

(1) Workers' Compensation/Employers' Liability:

(a) The Contractor's insurance shall cover the Contractor and its subcontractors of every tier for those sources of liability which would be covered by the latest edition of the standard Workers' Compensation Policy, as filed for use in Florida by the National Council on Compensation Insurance, without restrictive endorsements. In addition to coverage for the Florida Workers' Compensation Act, where appropriate, coverage is to be included for the Longshoremen's and Harbor Workers' Compensation Act, Maritime, including Jones Act, Federal Employers' Liability Act and any other applicable Federal or State laws.

NOTE: If the project is to be accomplished on the face of the wharf, the concrete area where crane rails are located to the edge of the wharf and underneath the wharf (piling, deck repairs, etc.), Longshoremen's and Harbor Workers' Compensation will be required.

(b) Subject to the restrictions of coverage found in the standard Workers' Compensation Policy, there shall be no maximum limit on the amount of coverage for liability imposed by the Florida Workers' Compensation Act, the Longshoremen's and Harbor Workers' Compensation Act, or any other coverage customarily insured under Part One of the standard Workers' Compensation Policy. The minimum amount of coverage for those coverage's customarily insured under Part Two of the standard Workers' Compensation (inclusive of any amounts provided by an umbrella or excess policy) shall be those amounts stated in Required Limits of Insurance (Form 100-87).

(2) Commercial General Liability:

The Owner shall be named an additional insured on the CGL Policy as well as Umbrella and or Excess policy or policies. The Owner shall not be responsible to pay any deductible sum. This is not meant to extend the Owner's liability beyond Section 768.28, Florida Statutes.

(a) The Contractor's insurance shall cover the Contractor for those sources of liability which would be covered by the latest

occurrence form edition of the standard Commercial General Liability Coverage Form (ISO Form CG 2010 07 04 or GC 2010 04 13 Additional Insured – Owners, Lessees, or Contractors-Schedule Persons or Organization, in combination with the GC 2037 10 01) or similar endorsements providing equal or broader Additional Insured Coverage. Commercial General Liability must be filed for use in the State of Florida by the Insurance Services Office, without the attachment of restrictive endorsements other than the elimination of Coverage C., Medical Payments and the elimination of coverage for Fire Damage Legal Liability.

(b) If the contract value of this Project exceeds $100,000, the Contractor shall maintain separate limits of coverage applicable only to the work performed under this contract. The minimum limits to be maintained by the Contractor (inclusive of any amounts provided by an umbrella or excess policy) shall be those that would be provided with the attachment of the Amendment of Limits of Insurance (designated Project or Premises) endorsement (ISO Form CG 25 01) to a Commercial General Liability Policy with the minimum amounts stated in the Required Limits of Insurance (Form 100-87).

(c) The Contractor shall continue to maintain Products/Completed Operations Coverage for a period of three (3) years after the contract completion date. The insurance shall cover those sources of liability which would be covered by the latest occurrence form edition of Coverage A of the Commercial General Liability Form (ISO Form CG 00 01) or Coverage A of the occurrence form Products/Completed Operations Liability Coverage Form (ISO Form CG 00 37), as filed for use in the State of Florida by the Insurance Services Office, without restrictive endorsements. The minimum limits to be maintained by the Contractor (inclusive of any amounts provided by an umbrella or excess policy) shall be the amounts stated in the Required Limits of Insurance (Form 100-87).

(d) Contractor agrees it's coverage will not contain any restrictive endorsement(s) excluding or limiting Products/Completed Operations, Independent Contractors, Broad Form Property Damage, X-C-U Coverage, Contractual Liability, Cross Liability or Separation of Insured's. The Contractor agrees that any self-Insured Retention or deductible shall not exceed $100,000.

(3) Business Auto Policy:

(a) The Contractor's insurance shall cover the Contractor for those sources of liability which would be covered by Part IV of the latest occurrence edition of the standard Business Auto Policy (ISO Form CA 00 01), including coverage for liability contractually assumed, as filed for use in the State of Florida by

the Insurance Services Office, without the attachment of restrictive endorsements. Coverage shall include owned, non-owned and hired autos.

(b) The minimum limits to be maintained by the Contractor (inclusive of any amounts provided by an umbrella or excess policy) shall be the amounts stated in the Required Limits of Insurance (Form 100-87).

(4) Protection for Owner Coverage:

(a) The Contractor shall provide the Owner with an Owner's and Contractor's Protective Liability Policy (OCP Policy). If the Contractor is unable to procure the minimum amounts of insurance in a single policy, the Contractor may provide the minimum limits through a combination of a primary OCP policy and one or more excess policies. The policy or policies shall cover the Owner for all sources of liability which would be covered by the latest occurrence edition of the standard Owner's and Contractor's Protective Liability Coverage Form, Coverage for Operations of Designated Contractor (ISO Form CG 00 09), as filed for use in the State of Florida by the Insurance Services Office, without the attachment of restrictive endorsements.

(b) The Owner shall also be a named an unconditional insured on the OCP Policy and, if applicable, the excess policy or policies. This coverage extends to any act or omission by the Owner, its employees, directors, and agents related to this project. The policy or policies shall be endorsed to include the Owner's officials, officers, agents and employees as insured's. The policy or policies shall include the Contractor and the Contractor's subcontractors of every tier as the contractor designated in the declarations. The coverage is not meant to waive any limits set by Section 768.28, Florida Statutes.

(c) The minimum OCP Policy limits per occurrence and if subject to an aggregate, annual aggregate to be provided by the Contractor (inclusive of any amounts provided by excess policies) shall be the same as the amounts shown in the Required Limits of Insurance (Form 100-87) as the minimum per occurrence and general policy aggregate limits respectively required for the Commercial General Liability Coverage. The limits afforded by the OCP Policy and any excess policies shall apply only to the Owner and the Owner's officials, officers, agents and employees and only to claims arising out of, or in connection with, the Work under this contract.

(d) The OCP Policy and, if applicable, the excess policy or policies, must be specifically endorsed to provide the Owner with 45 days' written notice of cancellation, non-renewal or restriction.

(e) As an alternative to the OCP policy, the Contractor may include the Owner and the Owner's officials, officers, agents, consultants and employees as Additional Insured's on the Commercial General Liability Coverage required pursuant to Subparagraph "c.2". If the Additional Insured alternative is selected, the coverage afforded such Additional Insured's shall be no more restrictive than that which would be afforded by adding the Owner and the Owner's officials, officers, agents, consultants and employees as Additional Insured's using the latest Additional Insured - Owners, Lessees or Contractors (Form B) endorsement (ISO Form CG 2010). Certificate of Insurance Compliance shall be clearly marked to reflect use of this alternative.

(5) Property Insurance:

(a) If the contract includes construction of, or additions to aboveground buildings or structures, Contractor shall provide all risk Builder's Risk Insurance on a form which is no more restrictive than that afforded by the latest editions of Insurance Services Office Forms CP 00 20 and CP 10 30. If the contract does not include construction of, or additions to aboveground buildings or structures but does involve the installation of machinery or equipment, Contractor shall provide an all risk installation Floater including installation and transit.

(b) For Builder's Risk, the amount of insurance is to be 100 percent of the completed value of such addition(s), building(s) or structure(s). For Installation Floater, the amount of insurance is to be 100 percent of the installed replacement cost value. For Builder's Risk, the recovery shall be based on completed replacement cost. For Installation Floater, the recovery shall be based on the installed replacement cost.

(c) The Builder's Risk Policy must be specifically endorsed to eliminate any "occupancy clause" or similar warranty or representation that the building(s), addition(s) or structure(s) in the course of construction shall not be occupied without specific endorsement of the policy. The policy must be endorsed to provide that, subject to the notice of cancellation requirement, the Builder's Risk coverage will continue to apply until final acceptance of the building(s), addition(s) or structure(s) by the Owner. The Installation Floater Policy must be specifically endorsed to provide that, subject to the notice of cancellation requirement, the policy shall remain in force until final acceptance of the machinery or equipment by the Owner.

(d) The maximum deductible shall be $5,000.00 per occurrence.

(e) The Owner must be included as a named insured for any liability arisen from its acts relating to the project.

(f) The policy must be specifically endorsed to provide the Owner with 45 days' written notice of cancellation, non-renewal or restriction.

(g) If the contract includes construction of, or additions to, aboveground buildings or structures which are located in a special flood hazard area as defined by the National Flood Insurance Program, flood insurance must be afforded for the lesser of the total insurable value of such buildings or structures, the maximum amount of flood insurance coverage available under the National Flood Program or, the total compensation due Contractor under the contract. If the contract does not include construction of, or additions to, aboveground buildings or structures but does include the installation of machinery or equipment in a building or structure which is located in a special flood hazard area as defined by the National Flood Insurance Program, flood insurance must be afforded for the lesser of the total insurable value of the machinery or equipment or the maximum amount of flood insurance coverage available under the National Flood Program.

d. The insurance provided by Contractor pursuant to this contract shall apply on a primary basis and any other insurance or self-insurance maintained by the Owner or an Owner's official, officer, agent or employee shall be excess of and not contributing with the insurance provided by or on behalf of the Contractor.

e. Except with respect to the Property Insurance, the coverage maintained by the Contractor shall apply on a first dollar basis without application of a deductible or self-insured retention.

f. Compliance with the insurance requirements of this contract shall not limit the liability of the Contractor, its subcontractors, employees, or agents to the Owner or others. Any remedy provided to the Owner or the Owner's officials, officers, agents and employees by the insurance shall be in addition to and not in lieu of any other remedy available under this contract or otherwise.

g. Indemnification.

(1) The Contractor shall indemnify, defend and hold harmless the JPA, its employees and elected officials, from all liabilities, damages, losses, costs and expenses of whatsoever kind or nature, including, but not limited to, reasonable attorney's fees, reasonable expert witness fees and court costs (all of which are collectively referred to as "Damages") to the extent such Damages are caused by the negligence, recklessness or intentional wrongful conduct of the Contractor and/or persons employed or utilized by the Contractor in the performance of this Agreement.

(2) In any and all claims against the Owner or its members, directors,

officers, employees, representatives and agents by any employee of the Contractor, any subcontractor, anyone directly or indirectly employed by any of them or anyone for whose acts any of them may be liable, this indemnification under this Sub-article "g." shall not be limited in any way by any limitation on the amount or type of damages, compensation or benefits payable by or for the Contractor or any subcontractor under workers' compensation acts, disability benefit acts or other employee benefit acts.

(3) In addition to those indemnities previously described, the obligations of the Contractor under this Sub-article "g." shall extend to the liability of the Consultant or Consultants, if any, on this Project, and the Consultant's members, directors, officers, employees, representatives or agents in the same manner as applicable to the Owner. Provided, however, the obligations of the Contractor under this Sub-article "g." shall not extend to the liability of the Consultant, its members, directors, officers, employees, representatives or agents arising out of: 1) the preparation or approval of maps, drawings, opinions, reports, surveys, change orders, designs or specifications, or 2) the giving of or the failure to give directions or instructions by the Consultant, its members, directors, employees, representatives or agents provided such giving or failure to give is the primary cause of the injury or damage.

(4) The remedy provided to the Owner and the Consultant and their respective members, directors, officers, employees, representatives and agents by this indemnification shall be in addition to and not in lieu of any other remedy available under this contract or otherwise. This indemnification obligation shall not be diminished or limited in any way to the total limits of insurance required in this contract or otherwise available to Contractor or any sub-contractor.

(5) To the fullest extent permitted by law, the Contractor shall indemnify, defend and hold harmless the Owner its officers, agents, volunteers, and employees from and against all claims, damages, losses, and expenses, including but not limited to all fees and charges of engineer(s), architect(s), attorney(s) and other professional(s), court costs, or other alternative dispute resolution costs arising out of, resulting from, or otherwise but for the performance or furnishing of Proposer's work or services under this Invitation to Bid; provided that any such claim, damage, loss or expense is attributable to bodily injury, sickness, disease, death or personal injury, or property damage, including the loss of use or diminution in value resulting there from; but only to the extent caused in whole or in part by the actual or alleged negligent acts, errors, or omissions of Contractor, Contractor's Subcontractor(s) or anyone directly or indirectly employed or hired by Contractor, or anyone for whose acts Contractor may be liable. The Owner reserves the right, but not the obligation, to participate in

defense without relieving Contractor of any obligation hereunder.

h. Contractor's Pollution Liability

(1) As evidence of compliance with the insurance required by Paragraph "c.", Subparagraphs 6 (Contractor's Pollution Liability), the Contractor shall furnish the Owner with a Certificate of Insurance Compliance (Form 101-87) signed by an authorized representative of the insurer(s) providing the coverage. The Contractor agrees the policy shall include a minimum three (3) year Discovery (tail) reporting period, and a retroactive date that equals or precedes the effective date of the Contract, or the performance if Work hereunder. This coverage can be provided on a Per-Project basis.

2. Surety Bonds.

a. General. All bonds shall be written through a reputable and responsible Surety bond agency licensed to do business in the State of Florida and with a Surety company or corporation meeting both Subparagraphs (1) and (2) below. All bonds, including bid bonds and contract bonds shall have affixed to them a certified copy of current Power of Attorney of the Attorney-in-Fact who executed the bond on behalf of the Surety. Bond requirements in excess of $500,000, including bid bonds and contract bonds, shall be written with a Surety company meeting the specifications of both Subparagraphs (1) and (2). In the event the bond requirement does not exceed $500,000, bonds written with a Surety company meeting either a) the requirements of Subparagraphs (1) and (2) or, alternatively, b) the requirements of Subparagraph (3) shall be acceptable.

(1) Having a minimum rating in the latest revision of Best's Insurance Reports of:

Contract Amount	Policyholder	Financial
Under $250,000	B+	Class III
$250,000.01 to $2,500,000	B+	Class IV
$2,500,000.01 to $5,000,000	A-	Class IV
Over $5,000,000.01	A	Class V

(2) Holding a current certificate of authority as acceptable Surety on federal bonds in accordance with U. S. Department of Treasury, Circular 570, current revision. If the amount of the bond exceeds the underwriting limitations set forth in the Circular, in order to qualify, the net retention of the Surety Company shall not exceed the underwriting limitation in the Circular and the excess risk must be protected by co-insurance, reinsurance, or other methods. Further, the Surety

Company shall provide the Owner with evidence satisfactory to the Owner that such excess risk has been protected in an acceptable manner.

(3) In the event the bond requirement does not exceed $500,000, bonds with a Surety Company in compliance with the following requirements shall be acceptable:

(a) The Surety Company holds a certificate of authority authorizing it to write Surety bonds in Florida.

(b) The Surety Company has twice the minimum surplus and capital required by the Florida Insurance Code at the time the invitation to bid is issued.

(c) The Surety Company is otherwise in compliance with the provisions of the Florida Insurance Code.

(d) The Surety Company holds a currently valid certificate of authority issued by the United States Department of the Treasury under Section 9304 to 9308 of Title 31 of the United States Code.

In order to qualify as an acceptable Surety Company under this Subparagraph (3), a Certificate and Affidavit for Surety Bond Insurer (Form CASBI included in the contract documents) shall be executed by an officer of the Surety bond insurer as evidence that a Surety Company is in compliance with the foregoing requirements and shall be submitted with the bond.

b. Agent. The name of the agent for the Surety Company shall be listed in the prescribed space on both the bid bond and the contract bond.

c. Bid Bonds. Refer to "Supplemental Instructions to Bidders," Article 6 "Bid Guaranty." Provisions of this Article apply to bid bonds. Surety's standard bond form for State of Florida is acceptable.

d. Contract Bonds. The Contractor, at its own expense, shall furnish a Performance Bond, and a Statutory Payment Bond as security for the faithful performance under the contract documents. The bonds shall be in an amount at least equal to the contract price, in the form provided in these contract documents, and with such Surety as is acceptable to the Owner. Such bonds shall indemnify the Owner for damages associated with unexcused late delay of the project.

e. Additional Bond. It is further mutually agreed between the parties hereto that if, at any time during the contract period, the Surety or Sureties upon the bonds ceases to meet the specified minimum criteria or otherwise become financially unsatisfactory, or if for any reason, such bond ceases to be adequate to cover the performance of the Work, the Contractor shall immediately, and at its expense, furnish an additional bond or replacement bond in such form, amount, and with such Surety or Sureties as shall be satisfactory. In such event, no further payments to the Contractor shall be

deemed to be due under this contract until such new or additional security for the faithful performance of the Work shall be furnished in manner and form satisfactory to the Owner.

SPECIAL CONDITIONS

INDEX

ITEM		PAGE NO. SC-
1.	Time for Completion	2
2.	Liquidated Damages	2
3.	Warranty	3
4.	Permits	3
5.	Owner's Minimum Project Work Rules	3
6.	Existing Soil Conditions	3
7.	Site Conditions	3
8.	Structure over Navigable Waters	4
9.	Welding, Burning, and Hot-work Regulations	4
10.	Tax Savings Program, General.	5
11.	Progress Photographs	8

SPECIAL CONDITIONS

The "General Conditions," Section I through Section V, and the articles of this section shall apply to the Contractor and all Subcontractors. The "Special Conditions" supplement and/or amend the "General Conditions" and other contract documents as necessary for this project. Any article, paragraph, or subparagraph in the "General Conditions" or other contract documents not so supplemented or amended by this section shall remain in effect.

1. Time for Completion

The Contractor shall totally and finally complete all work not later than **90** calendar days after receipt of Notice to Proceed.

2. Liquidated Damages

a. The parties agree that at the time of entering into this Agreement the parties cannot determine the precise amount of damages that JAXPORT will suffer in the event Contractor is unable to perform its obligations under this Agreement. The parties agree that the damages suffered by JAXPORT under such circumstances are uncertain and difficult to ascertain. Therefore, the parties agree that this sum is fair and reasonable and represents liquidated damages and is not a penalty.

b. Should the Contractor or, in case of its default, the Surety fail to complete the work within the time stipulated in the contract, or within such extra time as may have been granted by the Owner, the Contractor or, in case of its default, the Surety shall pay to the Owner not as a penalty but as Liquidated Damages the amount so due as determined below.

c. For each calendar day that any part of the work remains uncompleted after the expiration of the contract time, the sum per day specified below shall be deducted by the Owner from monies due the Contractor, not as a penalty but as agreed Liquidated Damages representing loss to the Owner for additional cost of contract administration, inconvenience and additional cost of operations only due the Owner as a result of the Contractor's late completion. If no money is due the Contractor, the Owner shall have the right to recover said sum or sums from the Contractor, from the Contractor's Surety, or from both. The assessment of Liquidated Damages shall be in addition to actual damages or claims to the Owner except for inconvenience, administrative costs, and additional costs of operation.

d. Liquidated Damages for failure to complete the work within the time specified for the completion of the work shall be:

$1,685.00 per calendar day

e. Permitting the Contractor to continue and to finish the work, or any part of it, after the expiration of the contract time allowed including extensions of time granted to the Contractor shall, in no way, act as a waiver on the part of the Owner, of the Liquidated Damages due under the contract.

f. In case of default of the contract and the completion of the work by the Owner, the Contractor and its Surety shall be liable for the Liquidated Damages and delay under the contract, but no Liquidated Damages shall be chargeable for any delay in the final completion of the work by the Owner due to any unreasonable action or delay on the part of the Owner.

3. Warranty

The Contractor agrees to correct or replace any defective materials or workmanship for a period of **1 Year** from execution of Certificate of Contract Completion and Contractor's Affidavit to Owner. The Technical Specifications may require a longer warranty period for all or portions of the Work.

4. Permits

The Contractor shall secure permits and licenses as specified in paragraph "f" of the "Contractor's Responsibility" section of the "General Conditions". The Owner will obtain State and Federal permits for permanent construction, and has applied for Federal and State dredge and fill permits and other local permits for this project, if applicable.

The Contractor shall obtain the City Building Permit and any permits required for the construction of temporary structures, and temporary dredging and filling which may be necessary to facilitate its construction scheme and operations.

5. Owner's Minimum Project Work Rules

See FORM PWR

6. Existing Soil Conditions

The Owner has, for its own use, made borings at or near the site of the Work. Any boring data shown in these contract documents is presented only as information which indicates certain conditions found and limited to the exact locations and on the dates indicated. Any interpretations or conclusions drawn by the Contractor from such data shall be its own and the Owner makes no representation or guarantee concerning the accuracy or completeness of such data. The Contractor shall be responsible for making its own determination of subsurface conditions prior to bidding and shall not assume that any of the aforesaid boring data will necessarily be found or maintained.

7. Site Conditions

The Contractor shall visit the location of the Work and make such investigations of existing conditions above or below the surface of the ground as it may deem necessary for the proper and timely performance of its work, including but not limited to field measurements, soil investigations, laydown areas, interferences and general logistics. No oral representations by any persons regarding such

conditions either before or after the execution of this contract, shall affect or modify any of the terms or obligations herein contained.

8. Structure over Navigable Waters

Where structures are erected in, adjacent to, or over navigable waters, the Contractor shall observe all regulations and instructions of Federal and other authorities having control over such waters. The Contractor shall not obstruct navigation channels without permission from the proper authority and shall provide and maintain navigation lights and signals in accordance with the Federal requirements for the protection of the structure, or falsework, and of navigation.

9. Welding, Burning, and Hot-work Regulations

The U. S. Coast Guard requires JAXPORT to maintain "welding and hot-work" permits valid for 3-year periods that allow JAXPORT and its Contractors to complete any such work on its marine terminal docks. The area of the terminal covered by this program extends landward from the face of the wharf 150 feet. Beyond 150 feet is covered by rules and regulations of the Jacksonville Fire Marshal's Office, and does not require permitting.

a. The Contractor must contact the designated JAXPORT terminal representative who will inspect the project area in accordance with, and issue the JAXPORT Cutting-Welding-Hot-work Authorization Form.

b. Once JAXPORT representative has issued the Authorization Form, he will give the Contractor a copy of the U. S. Coast Guard permit, which must be posted by the Contractor in the vicinity of the Contractor's project.

c. After receiving the completed Authorization Form and posting the U. S. Coast Guard permit in the job area, the Contractor must then contact the U. S. Coast Guard Marine Safety Office, Jacksonville, FL, supplying the following information:

   (1) U. S. Coast Guard Hot-work permit number

   (2) The types of hot-work to be accomplished

   (3) The exact location of the hot-work at the facility.

   (4) Anticipated duration of the hot-work

   (5) Type and location of any dangerous cargo on the facility.

   (6) Name/phone number of the point of contact at the facility.

   (7) The name of the Contractor.

d. The Marine Safety Office of Jacksonville will issue a reference number allowing the Contractor to use the JAXPORT Welding and Hot-work Permit" for up to a period of 7 days.

e. Steps a. through d. must be repeated each 7-day period thereafter until the welding and hot-work portions of the contract is complete.

It is the Contractor's responsibility to comply with all federal, state and local laws.

10. Tax Savings Program, General.

Goods and services purchased directly by the Contractor are subject to all State and/or local taxes. All items, materials, supplies and/or equipment incorporated and/or used in the construction of the project and paid for by the Contractor are, consequently, subject to all applicable taxes.

It is the Contractor's sole responsibility to incorporate any and all applicable taxes into the bid proposal including all railroad materials and equipment for this project without regard to the optional purchasing procedures hereinafter defined. JAXPORT is not a Railroad Company or Railroad Operator, therefore the railroad tax exemption rules do not apply to JAXPORT.

JAXPORT Tax Exemption

Chapter 212 of the Florida Statutes, however, provides JAXPORT with an exemption from the payment of sales taxes for all procurements made directly by JAXPORT.

This section contains the specific administrative and/or purchasing procedures that the Contractor shall follow for the purpose of facilitating JAXPORT's procurement of major items to the extent that JAXPORT may so elect and thereby obtain any benefit that may accrue to JAXPORT from the sales tax exemption permitted by the Florida Statutes.

Administrative and/or Purchasing Procedures.

The following procedures are hereby established to permit JAXPORT to purchase in its own name and for its own account some of the items, equipment, materials and supplies which will form part of the work for which the Contractor is obligated to construct under this contract.

Within a period of time that will not adversely impact the orderly progression of the Project, agreed upon by both JAXPORT and Contractor following notice of contract award, the Contractor shall prepare and submit to the Project Manager an itemization of all items, materials, supplies and/or equipment that will be incorporated into this Project for which the Contractor has a firm quotation and as hereinafter specified. If the Contractor does not have a firm quotation for any items at the time the initial list is prepared, the Contractor shall update the previously submitted list immediately upon obtaining the necessary quotation.

This list shall include all items identified on the plans or in the "Products" section of each Technical Specification that individually or collectively cost $10,000 or more and would normally be ordered from one supplier under a single Purchase Order. Items that are purchased on an "as needed" basis over time under multiple Purchase Orders, each of which are less than $10,000, may be excluded from this list even though the aggregate total cost of all items in this category exceeds the $10,000 minimum.

a) The list must contain the following:

1. A description of item, material, supplies and/or equipment to be procured. This description shall be by common name and be referenced to the technical specification and CSI code under which it is defined.

2. The quantity of the item, material, supplies and/or equipment to be procured, the unit cost applicable to each, and the appropriate State of Florida and local (Duval County) sales tax rate in which the procurement is delivered.

b) Within five (5) working days following receipt of the proposed purchasing list or supplemental firm quotation from the Contractor, the Project Manager will notify Contractor of JAXPORT's decision as to which items will be purchased directly by JAXPORT.

c) Purchase Orders for the selected items will be requested from the Purchasing Department using the Contractor's Letter of Quotation to identify the Vendor name, Contractor, and Not to Exceed amount of Purchase Order. Each Purchase Order will be assigned a number based on the project number and sequence number of Purchase Orders issued.

   It shall be understood by the Contractor that these Purchase Order Forms will be issued for the sole and specific purpose of procuring the selected items for incorporation in the Work for which the Contractor is obligated to construct under this contract.

d) Purchase Orders issued with Letter of Quotation attached, will be forwarded by Project Manager to Contractor with request to complete Purchase Order as to item(s) ordered, delivery instructions, and signature of Contractor.

   The Purchase Order, however, shall omit any Florida State or local sales tax. In lieu thereof, JAXPORT's Consumer's Certificate of Exemption No. 85-8012543323C-8 shall be attached to the Purchase Order prior to distribution.

   Each Purchase Order shall be completed and countersigned by the Contractor. The Contractor shall be responsible for assuring that the requirements for the procurement, as detailed on the plans and in the Technical Specifications, are satisfied.

e) Contractor will then return the completed Purchase Order(s) to JAXPORT for countersignature by the Project Manager approving purchase as to conformity to specifications; and to the Purchasing Department for countersignature by the Purchasing Manager.

f) After obtaining all signatures, the Project Manager shall simultaneously distribute the original to the Vendor or supplier with copies to the Purchasing Department, the Contractor, and the Finance Department.

g) The Contractor and Owner agree that it is to their mutual benefit that prosecution of the Work proceed with due diligence and without interruption. Vendors of selected items shall therefore make deliveries as directed by the Contractor, when needed, to enable the Contractor to perform his scheduled obligations.

h) JAXPORT and Contractor agree that the Contractor will receive, receipt for, inspect, accept and to the extent necessary, unload, store, and protect the selected items at either the jobsite or other place as the Contractor may deem appropriate until brought to the worksite by the Contractor.

The Contractor shall accept delivery of selected items from the appropriate Vendor as conforming to both the terms and conditions of the Purchase Order and applicable Technical Specifications.

i) Upon receipt of an invoice for selected items delivered, the Contractor will write on the face of the invoice that it is "okay for payment", sign, and date invoice. The invoice is then submitted in E-Builder to JAXPORT's Project Manager for authorization for payment.

j) Upon receipt of a properly approved invoice, JAXPORT shall pay the Vendor of the selected items the amount due as defined by the Purchase Order but without any Florida State or local sales tax.

Where the Contractor has special terms with a Vendor to receive a discount if paid within a 10, 30 days' time and if the invoice is received within that time frame, invoices will be processed and the discount taken of which JAXPORT will receive the benefit. The Contractor will be advised by mail when an invoice is forwarded to the Finance Department for payment and the amount to be paid, showing discounts taken by JAXPORT, if any. Otherwise, invoices will be paid within 30 days from date on invoice.

k) In preparation of its Monthly Progress Payment request, the Contractor shall show on Line 3 of the Application for Payment the total amount of purchase orders issued under this Tax Savings Program. On Line 4 of the Application for Payment, the Contractor will show the amount of tax savings. Line 5 of the Application is the total of Lines 3 and 4.

l) An adjustment shall be summarized by reporting at the end of the contract and a Change Order to the contract will be made to close out any remaining balances on purchase orders based on the total of payments against each purchase order made for selected items, plus the total sales tax computed. A final reconciliation change order will be issued on all tax savings purchase orders remaining balances based on payments plus sales tax.

m) Notwithstanding JAXPORT's payment for selected items, as provided for above, the Contractor assumes full responsibility for any change in price and liability associated with selecting and ordering the proper quantity and type of materials and equipment for scheduling the appropriate delivery date, selection of the appropriate Vendor or supplier, the correctness of the Purchase Order and receipt report and the storage, delivery, and protection of the equipment and/or material.

n) The Contractor shall use Owner approved Purchase Orders only for purchasing goods, equipment, materials and supplies previously designated or selected by JAXPORT. The Contractor shall immediately notify and consult with JAXPORT relative to any change or modification to any previously approved selected

item(s). The Contractor shall account for every Purchase Order including those voided for any reason, and shall return all voided and unused Purchase Order Forms prior to the final contract payment.

o) If the Contractor enters into one or more subcontracts with respect to any portion of the Work, the Contractor will require that each subcontractor allow, under the terms of their respective subcontracts, JAXPORT to purchase selected item(s) in the same manner as provided above with respect to the Contractor.

The Contractor shall sign all Purchase Orders for selected item(s) required by the subcontractor to complete the portion of the Work required by the subcontract.

11. Progress Photographs

Monthly Applications for Payment (see Article 16 of the "General Conditions") shall be accompanied by not less than 5 color photographs, approximately 3 inches by 5 inches in size showing current status of various areas and components of the Project. Photographs are to be mounted in report form with descriptive captions, and sequentially numbered and uploaded in E-Builder as an attachment to each AFP. The Progress Photograph Report shall contain the following certification on its front cover which requires signature of the Contractor's responsible official.

THIS IS TO CERTIFY THAT THE ATTACHED PHOTOGRAPHS ACCURATELY REPRESENT THE ACTUAL STATUS AND CONDITION ON _____ OF THE _____ _____ BEING CONSTRUCTED FOR THE JACKSONVILLE PORT AUTHORITY UNDER CONTRACT NO. ___MC-2132_____.

FIRM: _____

SIGNATURE: _____

NAME TYPED: _____

TITLE: _____

DATE:_____

REQUIRED LIMITS OF INSURANCE

Prior to commencing Work, Contractor shall furnish Owner with Certificates of Insurance (COI), and copies of required Endorsements and Forms, executed by a duly authorized representative of each insurer, showing compliance with the insurance requirements set forth below.

Additional Insured Endorsement must be submitted with COI document.

Owner shall be included as an additional insured under the Commercial General Liability policy for on-going and completed operations.

Primary & Non-Contributory Endorsement must be submitted with COI document.

Contractors CGL coverage must be Primary and Non-Contributory.

Waiver of Subrogation is required for Workers Compensation, CGL, and Auto Liability.

Waiver of Subrogation Form must be submitted with COI document.

1. WORKERS' COMPENSATION/EMPLOYERS' LIABILITY

Part One - There shall be no maximum limit (other than as limited by the applicable statute) for liability imposed by the Florida Workers' Compensation Act, or any other coverage required by the contract documents, which are customarily insured under Part One of the standard Workers' Compensation Policy.

Part Two - The minimum amount of coverage required by the contract documents which are customarily insured under Part Two of the standard Workers' Compensation Policy shall be:

- $1,000,000 (Each Accident)
- $1,000,000 (Disease-Policy Limit)
- $1,000,000 (Disease-Each Employee)

NOTE: If the project is to be accomplished on the face of the wharf, the concrete area where crane rails are located to the edge of the wharf and underneath the wharf (piling, deck repairs, etc.) the Longshoremen's and Harbor Workers' Compensation will be required.

2. MARINE GENERAL LIABILITY / COMMERCIAL GENERAL LIABILITY

(IF CGL IS ENDORSED FOR MARINE GENERAL LIABILITY)

The limits are to be applicable only to work performed under this contract and shall be those that would be provided with the attachment of the Amendment of Limits of Insurance (Designated Project or Premises) endorsement to a Marine General Liability Policy with the following minimum limits:

$1,000,000 Each Occurrence, $1,000,000 General Aggregate

$1,000,000 Products/Completed/On-Going Operations Aggregate

$1,000,000 Personal and Advertising Injury (each occurrence)

$1,000,000 Bodily Injury and Property Damage (each occurrence)

with maximum deductible or self-insured retention not exceeding $100,000.

The Policy shall include Completed Operations and On-Going Operations Coverage for ten (10) years following completion per the period of Florida statutory liability (Florida Statutes § 95.11), with no ISO Form 2294 Rider or other subcontractor error exclusion. Any deductible or self-insurance retention should be indicated on the Bidder's certificate of insurance.

Contractor's Marine General Liability coverage will be primary and non-contributory.

3. UMBRELLA LIABILITY

- $1,000,000 per Occurrence; $2,000,000 Aggregate

Minimum underlying coverages shall include Commercial General Liability, and Automobile Liability.

4. BUSINESS AUTO POLICY

Limit no less than $1,000,000 per accident for bodily injury and property damage. Maximum deductible or self-insured retention in an amount not exceeding $10,000. Any deductible or self-insurance retention should be indicated on the Bidder's COI document.

Covering any auto (code 1);
If no owned autos, hired (Code 8) and Non-owned autos (Code 9)

Failure of Contractor to maintain the required insurance shall constitute a default under this Agreement and, at Owner's option, shall allow Owner to terminate this Agreement.

5. MARINE CONTRACTOR LIABILITY

Contractor shall obtain Marine Contractors Liability coverage for property damage to such building(s), structure(s) or addition(s) with applicable sub-limits, or equivalent policy form with the minimum amount of insurance to be 100 percent of the completed value of such building(s), structure(s) or addition(s).

Contractor shall maintain such Contractor Liability insurance from the inception of its services, and until at least three (3) years after completion of all services required under this Agreement.

Prior to commencement of services, the Proposer / Consultant shall provide to JPA a certificate or certificates of insurance, signed by an authorized representative of the insurer(s) evidencing the insurance coverage specified in the foregoing Articles and Sections. The required certificates shall not only name the types of policies provided, but shall also refer specifically to this Agreement and Article, and to the above paragraphs in accordance with which insurance is being furnished, and shall state that such insurance

is provided as required by such paragraphs of this Agreement.

Cross-Liability Coverage: If Contractor's liability policies do not contain the standard ISO separation of insured's provision, or a substantially similar clause, they shall be endorsed to provide cross-liability coverage.

Sub-Contractor's Insurance: Contractor shall cause each subcontractor employed by Contractor to purchase and maintain insurance of the type specified in this agreement. When requested by Owner, Contractor shall furnish to Owner copies of certificates of insurance evidencing coverage for each subcontractor.

Failure of Contractor to maintain the required insurance shall constitute a default under this Agreement and, at Owner's option, shall allow Owner to terminate this Agreement.

Failure of Owner to demand such certificate or other evidence of full compliance with these insurance requirements, or failure of Owner to identify a deficiency from evidence that is provided, shall not be construed as a waiver of Contractor's obligation to maintain such insurance.

No Representation of Coverage Adequacy: By requiring the insurance as set out in this Agreement, Owner does not represent that coverage and limits will necessarily be adequate to protect Contractor, and such coverage and limits shall not be deemed as a limitation on Contractor's liability under the indemnities provided to Owner in this Subcontract.

CERTIFICATE OF INSURANCE COMPLIANCE

ADDRESSEE	**NAME INSURED**
Jacksonville Port Authority	**Name and Address of Insured:**
Post Office Box 3005	_____
Jacksonville, FL 32206-0005	_____
Attn: Engineering Services	_____
Contract Specialist	_____

By executing this Certificate of Insurance Compliance, the undersigned warrants to the addressee that: (1) the undersigned is an authorized representative of the insurers identified in the certificate, (2) the policies or binders described in the certificate have been issued to the above named insured and are in force at this time, (3) the policies or binders as issued provide coverage in full compliance with the insurance requirements contained in the contract documents for the above referenced project with the minimum limits of coverage as specified in the Required Limits of Insurance (Form 100-87) and the contract documents, and (4) the policies or binders will not be changed, cancelled, non-renewed, or renewed with more restrictive terms and conditions so as to affect this certificate until at least forty-five (45) days after written notice of such change, cancellation or nonrenewal has been received by the addressee.

DESCRIPTION OF INSURANCE POLICIES SUBJECT TO THIS CERTIFICATE

Complete the following section for each of those coverages for which the undersigned is making the above warranty. The sum of the limits shown for the primary and excess insurers must equal or exceed the minimum limits required by the contract.

Employer's Liability/Workers' Compensation Limits	**Primary Issuer ID:** _____	**First Excess ID:** _____	**Second Excess ID:** _____
Part One	$	$	$
Part Two (Each Accident	$	$	$
Disease-Policy Limit			
Disease-Each Employee	$	$	$

Longshoremen's and Harbor Workers' Compensation	**Primary Issuer ID:** _____	**First Excess ID:** _____	**Second Excess ID:** _____
	$	$	$

Commercial General Liability Limits	**Primary Issuer ID: _____**	**First Excess ID: _____**	**Second Excess ID: _____**
General Aggregate	$	$	$
Products/Completed Operation Aggregate	$	$	$
Personal and Advertising Injury, Each Occurrence	$	$	$
Body injury and property damage	$	$	$
Fire damage (any one fire)	$	$	$
Medical expense (any one person)	$	$	$

Business Auto Liability Limits	**Primary Issuer ID: _____**	**First Excess ID: _____**	**Second Excess ID: _____**
Each Occurrence	$	$	$
Annual Aggregate	$	$	$

Protection for Owner's Liability Limits	**Primary Issuer ID: _____**	**First Excess ID: _____**	**Second Excess ID: _____**
Each Occurrence			
Annual Aggregate			
Or Commercial General Liability Coverage Contains the Described Additional Insured Endorsement YES____ NO____			

Property Insurance Risk	**Primary Issuer ID: _____**	**First Excess ID: _____**	**Second Excess ID: _____**
Builder's Risk			
Installation Floaters			
Railroad Protective Liability Coverage			

POLICY AND INSURER INFORMATION

ID	Name of Insurer	Policy Number	Expiration Date	Best's Rating	Authorized in Florida (Y/N)?

Authorized Representative's Name: _____

(Print and then sign)

Date: _____

Name of Insurance Company: _____

Address of Insurance Company: _____

JACKSONVILLE PORT AUTHORITY

SUMMARY AND CERTIFICATION

APPLICATION FOR PAYMENT NO.

PROJECT NAME:
PROJECT LOCATION: DATE:
JPA CONTRACT NO: MC-2132 A/E PROJECT NO.:
CONTRACTOR:
APPLICATION PERIOD: TO:

1. ORIGINAL CONTRACT SUM..... $ _____

2. MODIFICATION BY CHANGE ORDERS ..... $ _____

3. LESS: Purchase Orders issued by JPA for material selected for tax savings..... $ _____
4. LESS: State and Local Tax savings on material purchase orders..... $ _____
5. LESS: TOTAL PURCHASE ORDERS & TAX SAVINGS..... $ _____
(Line 3 plus Line 4)
6. CURRENT CONTRACT VALUE..... $ _____

7. TOTAL COMPLETED & STORED TO DATE..... $ _____

8. RETAINAGE WITHHELD:
_____% of Completed Work
_____ % of line 7)..... $ _____

10. TOTAL EARNED LESS RETAINAGE WITHHELD..... $ _____

11. LESS PREVIOUS PAYMENTS RECEIVED..... $ _____

12. AMOUNT DUE THIS PAYMENT..... **$** _____

SUMMARY OF APPROVED CHANGE ORDERS			SUMMARY TAX SAVING'S PURCHASE ORDERS		
No.	Date Appd.	Value (+ -)	No.	Date Appd.	Value (+ -)
		TOTALS: $			TOTALS: $
==========			'==========		

CONTRACTOR'S CERTIFICATION

The undersigned CONTRACTOR certifies that: (1) all items and amounts shown above are correct; (2) all Work performed and materials supplied fully comply with the terms and conditions of the Contract Documents; (3) all previous progress payments received from JAXPORT on account of Work done under the Contract referred to above have been applied to discharge in full all obligations of CONTRACTOR incurred in connection with Work covered by prior Applications for Payment; (4) title to all materials and equipment incorporated in said Work or otherwise listed in or covered by this Application for Payment will pass to JAXPORT at time of payment free and clear of all liens, claims, security interests and encumbrances; and (5) if applicable, the CONTRACTOR has complied with all provisions of Article V of the Specification documents including the payment of a pro-rata share to SEB, MBE, WBE, DBE and/or SBA Firms of al payments previously received by the CONTRACTOR.

State of Florida, County of Duval
Subscribed and sworn to **before me this**
_____**day** of _____ 20_____-

By:_____-
Title._____ Date:_____
who is/are personally known to me or has/have produced
_____ (type of identification)
as identification.
Notary Signature:_____-
Commission No.:_____-
_____
(Name of Notary typed,
Printed or Stamped)
My Commission Expires:_____ -(SEAL ABOVE)

BY THE OWNER'S CONSULTANT

I hereby certify that, to the best of my knowledge, and belief, based in part on actual site observations, the Contractor has satisfactorily completed the work represented in this Application for Payment in accordance with requirements of the contract documents, and payment of the current amount due to the Contractor is recommended.

Firm:-_____

By:-_____

Title: Date:_____

JPA APPROVAL FOR PAYMENT

By:_____

Date:_____

Project Acct.:_____

FORM AFP-1 REVISED 11/01/2022

R/08/06

CONTINUATION SHEET

FORM AFP-2 REV 10/2013

CONTRACTOR NAME:

APPLICATION NO:

CONTRACTOR'S CONTRACT NO:

APPLICATION DATE:

PROJECT NAME:

DATE OF NOTICE TO PROCEED:

PERIOD FROM / TO:

CONTRACT COMPLETION DATE:

PERCENT OF TIME USED TO DATE: _____% PERCENT COMPLETE TO DATE: _____%

A	B	C	D	E	F	G	H	I	J	K
DELIVERABLES	ITEM NO. CSI CODES	DESCRIPTION OF WORK	SCHEDULED VALUE	WORK COMPLETED FROM PREVIOUS APPLICATION (E + F)	WORK COMPLETED THIS PERIOD	MATERIALS PRESENTLY STORED (NOT IN E OR F)	TOTAL COMPLETED AND STORED TO DATE (E+F+G)	% (H ÷ D)	BALANCE TO FINISH (D - H)	RETAINAGE
							$0.00	#DIV/0!	$0.00	$0.00
							$0.00	#DIV/0!	$0.00	$0.00
							$0.00	#DIV/0!	$0.00	$0.00
							$0.00	#DIV/0!	$0.00	$0.00
							$0.00	#DIV/0!	$0.00	$0.00
							$0.00	#DIV/0!	$0.00	$0.00
							$0.00	#DIV/0!	$0.00	$0.00
							$0.00	#DIV/0!	$0.00	$0.00
							$0.00	#DIV/0!	$0.00	$0.00
							$0.00	#DIV/0!	$0.00	$0.00
							$0.00	#DIV/0!	$0.00	$0.00
							$0.00	#DIV/0!	$0.00	$0.00
							$0.00	#DIV/0!	$0.00	$0.00
							$0.00	#DIV/0!	$0.00	$0.00
							$0.00	#DIV/0!	$0.00	$0.00
							$0.00	#DIV/0!	$0.00	$0.00
							$0.00	#DIV/0!	$0.00	$0.00
							$0.00	#DIV/0!	$0.00	$0.00
							$0.00	#DIV/0!	$0.00	$0.00
CHANGE ORDERS ISSUED TO DATE										
						N/A	$0.00	#DIV/0!	$0.00	$0.00
						N/A	$0.00	#DIV/0!	$0.00	$0.00
						N/A	$0.00	#DIV/0!	$0.00	$0.00
						N/A	$0.00	#DIV/0!	$0.00	$0.00
						N/A	$0.00	#DIV/0!	$0.00	$0.00
						N/A	$0.00	#DIV/0!	$0.00	$0.00
		GRAND TOTALS					$0.00	#DIV/0!	$0.00	$0.00

SUMMARY LINE ITEM DEDUCTIONS FOR TAX SAVINGS PURCHASE ORDERS ISSUED AND PAID TO DATE REPORT

A	B	D	E	F	G	H	I	J	K	L
DATE OF REPORT	TOTAL # OF TSPO'S ISSUED TO DATE	SUB-TOTAL MATERIAL TSPO'S ISSUED - SCHEDULED VALUE DEDUCT	TOTAL ESTIMATED SALES TAX	TOTAL TAX SAVINGS P.O. DEDUCTION (D + E)	VENDORS PAID TO DATE PREV. PERIOD	VENDORS PAID TO DATE THIS PERIOD	TOTAL SALES TAX DEDUCTION TO DATE	TOTAL MATERIALS & TAXES RECEIVED AND STORED TO DATE (G + H + I)	BALANCE TO FINISH (F - J)	% OF PURCHASED MATERIALS COMPLETED (J ÷ F)
		($)								
		TOTALS (SEE TSPO REPORT)	$0.00	$0.00	$0.00	$0.00	$0.00	#DIV/0!	$0.00	$0.00

FORM AFP-2 REV 10/2013

MC-2132
Request for Information

Date Created:

Answer Company **Answer By** **Author Company** **Authored By**

Co-Respondent **Author RFI Number**

Subject **Discipline** **Category**

Question **Date Required**

Submitted By: _____ **Date:**_____

Suggestion

Answer **Date Answered:**

Submitted By: _____ **Date:**_____

AGREEMENT BETWEEN OWNER AND CONTRACTOR

This Agreement is entered into as of this _____ day of _____, 20__ by and between:

The OWNER:	**Jacksonville Port Authority** **2831 Talleyrand Avenue** **Post Office Box 3005** **Jacksonville, FL 32206-0005** **(904) 357-3058** **ATTN: Procurement Services**
And the CONTRACTOR:	**Awarded Contractor Name** **Awarded Contractor Address** **Awarded Contractor Phone Number** **Insert Vendor Number**
For the following WORK:	**Contract No.: MC-2132** **Project No.: T2027.01** **INSTALLATION OF NEW CRANE STOW PIN SOCKETS AT TMT TALLEYRAND MARINE TERMINAL**
Designed by CONSULTANT:	**N/A**

The OWNER and CONTRACTOR agree as set forth below:

ARTICLE 1. SCOPE OF WORK

The Contractor agrees to furnish all materials, equipment, supervision and perform all labor and services for Contract No. **MC-2132** as shown on the contract drawings and described in the project specifications, each document of which is incorporated herein by reference and listed under Article 2 hereof.

ARTICLE 2. CONTRACT DOCUMENTS

The contract documents, which constitute the entire Agreement between the Owner and the Contractor, are enumerated below and all are as fully a part of the contract as if attached to this Agreement Form or repeated herein.

1. Agreement between Owner and Contractor.
2. Exhibits and Attachments to this Agreement.
3. Contractor's Bid, Performance Bond, and Statutory Payment Bond.
4. Contractor's Bid Form.
5. Invitation to Bidders.
6. Supplementals Instruction to Bidders.
7. Conflict of Interest Certificate.
8. General Conditions of the contract.
9. Supplementary Conditions of the contract.
10. Special Conditions of the contract.
11. Technical Specifications.
12. Drawings entitled:_____
13. Addenda Nos._____through_____, inclusive.
14. Change Orders, duly authorized and delivered after execution of this Agreement.
15. Notice of Award.
16. Notice to Proceed.
17. Certificate of Contract Completion and Contractors Affidavit to Owner.
18. Certificate of Substantial Completion.
19. Approved Contractor's Construction Schedule for the Work.
20. Contractor's Schedule of Values for the Work.
21. Contractor’s Request for Information Form.
22. Owner’s Minimum Project Work Rules.
23. Required Limits of Insurance.
24. Certificate of Insurance Compliance.
25. Application for Payment Forms.
26. Form of Consent of Surety Company to Final Payment.
27. SEB Participation Goal – (**ENCOURAGED**)

ARTICLE 3. CONTRACT TIME

1. Contract Time. Time is of the essence for all Work in this contract. The Contractor shall totally and finally complete the Work within **90** calendar days from Notice to Proceed date.
2. Liquidated Damages. Refer to "Special Conditions", Item 2.

ARTICLE 4. CONTRACT SUM

For the performance of the Work and in accordance with the terms of the contract documents, the Owner will pay to the Contractor, subject to additions and deductions by Change Order, the Contract Sum of:

$_____

ARTICLE 5. PROGRESS PAYMENTS

See "General Conditions", Section IV.3.a.

ARTICLE 6. FINAL PAYMENT

The Owner shall cause to be paid, to the Contractor, a final payment constituting the entire unpaid balance of the Contract Sum, when the Work has been completed, the Contract and closeout procedures are fully performed, and the Project Manager has reviewed and approved the final application.

ARTICLE 7. MISCELLANEOUS PROVISIONS

1. Terms. Terms used in this Agreement which are defined in the Conditions of the contract shall have the meaning designated therein.
2. Contract Bonds. The Contractor shall furnish a Performance Bond, and Statutory Payment Bond for 100 percent of the Contract Sum as security for the faithful performance and payment of all obligations under the contract documents.
3. Indemnity. In addition to the indemnity provisions of General Conditions Section V.1.g., the Contractor shall hold harmless, indemnify and defend the JPA, its board of directors, officers, employees, representatives and agents against any claim, action, loss, damage, injury, liability, cost and expense of whatsoever kind or nature, including but not limited to attorney's fees and court costs arising out of any injury, whether mental or corporeal, to persons, including death, or damage to property to the extent caused by the negligence, recklessness or intentional wrongful misconduct of the Contractor, its employees, representatives, or any one acting on the Contractor's behalf in the performance of this contract, or any claim or damage or claim damage related to alleged breach of contract.
4. Access to Documents. The Owner shall be provided daily reports in possession of the Contractor. Owner shall also have access to any other documents related to the project, upon reasonable notice.
5. Subcontracting or Assigning of Contract. The Contractor agrees that it shall not

subcontract, assign, delegate, or otherwise dispose of the contract, the duties to be performed under the contract, or the monies to become due under the contract without the Owner's prior written consent.

IN WITNESS WHEREOF, the parties hereto have duly executed this Agreement as of the day and year first above written.

OWNER	CONTRACTOR
JACKSONVILLE PORT AUTHORITY	
BY: _____	BY: _____
TITLE: _____	TITLE: _____
ATTEST:	ATTEST:
_____	_____

CERTIFICATE OF CONTRACT COMPLETION AND CONTRACTOR'S AFFIDAVIT TO OWNER

CONTRACT: **MC-2132**

STATE OF ( )

COUNTY OF ( ) Before me, the undersigned authority,

Personally appeared _____, who being by me
First duly sworn, depose(s) and say(s):

1. He is (they are)_____, (a corporation) (a partnership) (an individual) doing business as _____, hereinafter called "Contractor".

2. Contractor heretofore entered into a contract with the Jacksonville Port Authority, hereinafter called "Owner", to furnish material, labor, and services for the construction of a certain building; or repairs or alterations as more specifically described in said contract, on the land and property of the Owner, located at _____, Duval County, Florida.

3. Contractor has fully completed construction in accordance with the terms of the contract and all creditors have been paid in full, except:

Name of Creditor	Amount Due and Unpaid
_____	$_____
_____	$_____

4. All Workers' Compensation claims have been settled and no liability claims are pending in connection with, arising out of or resulting from, the contract.

5. Receipt by the Contractor of the final payment, under the aforementioned contract, shall constitute a full release and discharge by the Contractor to the Owner of any and all claims of the Contractor against the Owner arising out of, connected with, or resulting from performance of the obligations of the Contractor pursuant to the contract documents.

6. The term "Creditor" as used in this Affidavit means subcontractors, laborers, material men, architects, engineers, landscape architects, surveyors, and all other persons, firms, corporations and activities supplying , performing, or otherwise providing anything of value used for or in connection with the contract.

7. This Affidavit is given pursuant to the provisions of the contract and applicable law, if any. Signed and Sealed in the presence of:

_____ _____

_____ _____

Sworn to and subscribed before me this _____day _____, 20___.

_____
Notary Public, State of _____
My Commission Expires: _____

CERTIFICATE OF SUBSTANTIAL COMPLETION

Distribution to:

OWNER ☐
ENGINEER ☐
CONTRACTOR ☐
FIELD ☐
OTHER ☐

PROJECT: INSTALLATION OF NEW CRANE STOW PIN SOCKETS AT TMT

ENGINEER:
TALLEYRAND MARINE TERMINAL
ARCHITECT'S PROJECT NO.:

TENANT:

PROJECT NO.: T2027.01
CONTRACT NO.: MC-2132

TO (Owner):

JACKSONVILLE PORT AUTHORITY
POST OFFICE BOX 3005
JACKSONVILLE, FL 32206-0005

ATTN: ENGINEERING SERVICES

CONTRACTOR:

CONTRACTOR FOR:

DATE OF ISSUANCE:

CONTRACT DATE:

PROJECT OR DESIGNATED PORTION SHALL INCLUDE:

The Work performed under this Contract has been reviewed and found to be substantially complete. The Date of Substantial Completion of the Project or portion thereof designated above is hereby established as _____, **20____** which is also the date of commencement of applicable warranties required by the Contract Documents, except at stated below.

DEFINITION OF DATE OF SUBSTANTIAL COMPLETION

The Date of Substantial Completion of the Work or designated portion thereof is the Date certified by the Engineer when construction is sufficiently complete, in accordance with the Contract Documents, so the Owner can occupy or utilize the Work or designated portion thereof for the use for which it is intended, as expressed in the Contract Documents.

A list of items to be completed or corrected, prepared by the Contractor and verified and amended by the Engineer, is attached hereto. The failure to include any items on such list does not alter the responsibility of the Contractor to complete all Work in accordance with the Contract Documents. The date of commencement of warranties for items on the attached list will be the date of final payment unless otherwise agreed to in writing. Attached Punch List prepared by dated .

ENGINEER BY DATE

The Contractor will complete or correct the Work on the list of items attached hereto within **(_____calendar)** days from the Date of Substantial Completion.

CONTRACTOR BY DATE

The Tenant accepts the Work or designated portion thereof as substantially complete and will assume full possession thereof at (time) (date).

TENANT BY DATE

The Owner accepts the Work or designated portion thereof as substantially complete and will assume full possession thereof at (time) (date).

Jacksonville Port Authority
OWNER BY DATE

FORM SUBCOM
R/08/06

CONSENT OF SURETY COMPANY TO FINAL PAYMENT

OWNER ☐
ENGINEER ☐
CONTRACTOR ☐
FIELD ☐
OTHER ☐

PROJECT: INSTALLATION OF NEW CRANE STOW PIN SOCKETS AT TMT
PROJECT NO. T2027.01
(name, address)

CONTRACT NO.: MC-2132

TO (Owner)

ARCHITECT'S PROJECT NO.

JACKSONVILLE PORT AUTHORITY
POST OFFICE BOX 3005
JACKSONVILLE, FL 32206-0005

CONTRACT FOR:

ATTN: ENGINEERING SERVICES

CONTRACT DATE:

CONTRACTOR:

In accordance with the provisions of the Contract between the Owner and the Contractor as indicated above, the

(here insert name and address of Surety Company)

SURETY COMPANY,

On bond of (here insert name and address of Contractor)

CONTRACTOR,

hereby approves of the final payment to the Contractor, and agrees that final payment to the Contractor shall not relieve the Surety Company of any of its obligations to (here insert name and address of Owner)

OWNER,

as set for in the said Surety Company's bond.

IN WITNESS WHEREOF,
The Surety Company has hereunto set its hand this day of 20

Surety Company

Signature of Authorized Representative

Attest:
(Seal):

Title

OWNER'S MINIMUM PROJECT WORK RULES

Project Name: **INSTALLATION OF NEW CRANE STOW PIN SOCKETS AT TMT**

Location: **TALLEYRAND MARINE TERMINAL**

Contract No(s).: **MC-2132**

1. Normal project working hours are as follows:

6:00 A.M.	Starting Time
12:00 Noon - 1:00 P.M.	Lunch
7:00 P.M.	Shift Ends

   Other working hours and shift work will be considered by the Owner upon submission by the Contractor.

2. No employee will enter Port Authority operating areas without a specific work assignment.
3. Personal vehicles will be parked in the area(s) specified for construction personnel.
4. No personal vehicles will be permitted inside the security gate controlled area without the written permission of the Terminal Director.
5. Contractor shall provide its employees with a designated eating, drinking area subject to approval of the Project Manager. Cleanliness will be maintained in all areas at all times. The parking lot is not an authorized eating area.
6. The following is a list of violations which are considered unsatisfactory conduct on JAXPORT property and can result in the employee being denied access to the jobsite.
   a. Refusal to submit to security inspection.
   b. Smoking in prohibited areas.
   c. Possession and/or use of intoxicants on JAXPORT property.
   d. Possession and/or use of narcotics or controlled substance on JAXPORT property.
   e. Possession of firearms on JAXPORT property.
   f. Contact with any new vehicles on JAXPORT property.
7. Owner's facilities (such as, but not limited to, elevators, washrooms, vending machines, lunch rooms, etc.) are not to be used by Contractor's employees.
8. Employees shall be provided with visible means of identification, showing Contractor's identification. Employees are required to wear this identification where plainly visible.
9. The Contractor will be responsible for all its employees, suppliers, vendors, and all others on-site providing services to the Contractor.

10. All vehicles, persons, packages, lunch pails, and tool boxes entering or leaving JAXPORT property are subject to security inspection.

11. All vehicles on-site for the Contractor's use must have company identification clearly visible at a minimum distance of 100 feet.

EMPLOYEE SIGNATURE: _____

EMPLOYEE NAME: _____

NAME OF CONTRACTOR: _____

DATE: _____

OWNERS SAFETY GUIDELINES

Project Name: **INSTALLATION OF NEW CRANE STOW PIN SOCKETS AT TMT**

Location: **TALLEYRAND MARINE TERMINAL**

Contract No(s).: **MC-2132**

The safety items listed below is not intended as an exhaustive list of safety requirements but serves as a general guideline.

Safety Manual

The contractor is responsible to provide JAXPORT with an electronic copy of their jobsite specific safety manual that provides safety guidance on day to day work activities to reduce potential safety incidents at the jobsite.

Regulatory Requirements

The contractor and subcontractors will be responsible to:

- Comply with OSHA 29 CFR parts 1917 marine terminals, 1926 construction, 1910 general, 1926.59 hazardous communication standards "right-to-know".
- Post Material safety data sheets (MSDS) in work locations where contractor uses, or stores hazardous chemicals or substances as required by law.
- Contractor and subcontractor will comply with all environmental protection laws and regulations applicable to the jobsite, including those relating to the use of water, the release, discharge or disposal of wastes, the control of drainage, and the protection of vegetation, wildlife, habitats, or surroundings. Contractor and subcontractor shall also observe and comply with any environmental requirements made by JAXPORT in securing any permit or authorization for the jobsite.
- Communicate and wear OSHA required personal protective equipment when on the job site (i.e. reflective vests with Company's identification, gloves, hard hats, safety glasses, steel toe shoes, etc.).
- If applicable ensure that platforms and scaffolding conform to OSHA specifications and have decking, toe boards, mid and top rail, cross bracing, level pads and/or wheels and appropriate ladders for platform access. Ensure the use of continuous fall protection equipment (scaffolds and/or harnesses) when activities take place more than 6'-0" above a lower level or at such lower elevations as may be established for the work site.
- If it becomes necessary to have access to any openings or shafts or to remove handrails, contractor and or subcontractor shall ensure that the openings or shafts are protected in accordance with generally accepted practices and any applicable federal, state or local safety standards while the work is in progress, and that any covers or handrails previously removed by the contractor and or subcontractor are replaced before leaving the area.

Jobsite Requirement

- Contractor will provide safety barriers to clearly identify the working area to prevent others from accessing the work area. The safety zone shall be sufficiently sized to prevent damage to others or existing facilities and structures. Upon completion of the work, Contractor shall remove the safety barriers from the work area.
- Maintain clean work areas and secure and protect all work materials in accordance with safety requirements of generally recognized industry standards.
- Additional safety rules and/or measures may become necessary at any time due to near misses, change in jobsite location, etc.
- Familiarize and abide by JAXPORT safety rules for the jobsite.
- Communicate frequency of safety meeting with its employees and list the topics discussed with signatures of attendees. Such list shall be made available to JAXPORT upon request.
- Perform self-audits (safety assessments) at least monthly and document and provide findings to JAXPORT project management and Risk and Compliance manager upon request.

Incident/Emergency Response Plan

- As soon as possible, but no longer than 2 hrs. after the time of incident, advise JAXPORT of any incident resulting in injury or damage to any property. A written report of the incident will be submitted to the supervising JAXPORT Project Manager and JAXPORT's Manager of Risk and Compliance (904) 357-3083 within 24 hours. Daily updates will be provided to JAXPORT until an investigation is completed.
- Provide JAXPORT on-site management with an "emergency list" showing contractor's preferred company doctor, hospital, workers' compensation insurance company, and any other health care providers, such list to be updated within 24 hours of any change in the information provided. Contractor shall furnish its employees with first aid or refer employees with first aid injuries to its company doctor.

Audit and Training

- Contractor is responsibility to train, manage, supervise, monitor, and inspect contractors and subcontracted jobsite work activities enforcing compliance with all applicable federal, state, local laws and JAXPORT safety rules and requirements.
- Documentation of required training must be readily available and in compliance with OSHA requirements.
- JAXPORT personnel may audit contractors and subcontractor's safety processes/programs at the jobsite at any time and empowered to take necessary corrective action up to and including work stoppage for serious safety hazards.

OWNERS SAFETY GUIDELINES

EMPLOYEE SIGNATURE: _____

EMPLOYEE NAME: _____

NAME OF CONTRACTOR: _____

DATE: _____

PERFORMANCE BOND

BOND NO.: _____

As to the Contractor/Principal:

Name: _____

Principal Business Address:_____

_____

Telephone:_____

As to the Surety:

Name: _____

Principal Business Address:_____

_____

Telephone:_____

As to the Owner of the Property/Contracting Public Entity:

Name: _____

Principal Business Address:_____

_____

Telephone:_____

Description of project including address and description of improvements:

_____

_____

Contractor and Surety are each held and firmly bound unto the Jacksonville Port Authority, a body politic and corporate in Duval County, Florida, as Obligee (hereinafter called "JPA"), in the amount of _____DOLLARS **($_____),** lawful money of the United States of America, for the payment whereof Contractor and Surety bind themselves, their respective heirs, executors, administrators, legal representatives, successors and assigns, jointly and severally, firmly by these presents.

WHEREAS, Contractor has by written agreement dated the _____day of **_____,** 20____, entered into a contract with the JPA for **INSTALLATION OF NEW CRANE STOW PIN SOCKETS AT TMT, TALLEYRAND MARINE TERMINAL** all of said work to be done in strict accordance with any advertisement for bids for said work and done in strict compliance with the drawings and specifications for said work and requirements of the JPA proposal and award therefore and of the contract and all documents included as a part of the contract (hereinafter referred to collectively as the "Contract"), all of which are by reference made a part hereof to the same extent as if fully set out herein.

NOW, THEREFORE, THE CONDITION OF THIS OBLIGATION is such that, if Contractor shall: (1) Promptly and faithfully perform said Contract; and (2) perform the guarantee of all work and materials furnished under the Contract for the time specified in the Contract; and (3) pay the JPA all losses (including delay and disruption damages), expenses and costs, that the JPA sustains because of a default by Contractor under the Contract; then this obligation shall be null and void; otherwise it shall remain in full force and effect.

PROVIDED that, the Surety hereby waives notice of any alteration or extension of time made by the JPA, and any changes in or under the Contract and compliance or noncompliance with any formalities connected with the Contract or the changes shall not affect Surety's obligation under this bond.

PROVIDED further that, whenever Contractor shall be, and declared by the JPA to be in default under the Contract, the JPA having performed the JPA's obligations hereunder, the Surety shall, at the JPA's sole option, either:

(1) Within fourteen (14) days of notice of elected option by the JPA, remedy the default and pay the JPA all losses, actual damages (including delay and disruption damages), expenses, costs, and statutory attorney's fees, including appellate proceedings, pursuant to Section 627.756, Florida Statutes, that the JPA sustains because of a default by Contractor under the Contract and will save the JPA harmless on account of all claims and damages to persons, property or premises arising from delay in meeting either milestone dates or the Contract completion date; or

(2) Award a bid contract with a completion contractor and issue notice to proceed within twenty-one (21) days of notice by the JPA to the Surety of the default of Contractor and demand by the JPA for Surety to complete the Contract. Surety shall obtain a bid or bids for completing the Contract in accordance with its terms and conditions, and upon determination by Surety of the lowest responsible qualified bidder, or, if the JPA elects, upon determination by the JPA and the Surety jointly of the lowest bidder and the JPA, and make available as Work progresses (even though there should be a default or a succession of defaults under the contract or contracts of completion arranged under this paragraph) sufficient funds to pay the cost of completion less the responsible qualified bidder, arrange

for a contract between such balance of the contract price, including other losses, actual damages (including delay and disruption damages), expenses, costs and statutory attorney's fees, including appellate proceedings, pursuant to Section 627.756, Florida Statutes, for which the Surety may be liable hereunder. The term balance of the contract price" as used in this paragraph, shall mean the total amount" payable by the JPA to Contractor under the Contract and any amendments thereto, less the amount properly paid by the JPA to Contractor; or

(3) Within fourteen (14) days of notice of elected option by the JPA, tender to the JPA the full amount necessary in order for the JPA to completely perform and carry out completion of the Contract in accordance with its terms and conditions and in order to save the JPA harmless on account of all claims and damages to persons or property, and pay the JPA for all losses, actual damages (including delay and disruption damages), including those arising from delay in meeting either milestone dates or the Contract completion date, expenses, costs and statutory attorney's fees, including appellate proceedings, pursuant to Section 627.756, Florida Statutes.

PROVIDED further that, the Surety shall save the JPA harmless from any and all damages, including expenses, costs, contractual damages, injury, negligence or default, patent infringement and actual damages (including delay and disruption damages) and assessments which may arise by virtue of any defects in work or materials within a period of one (1) year from the date on which the JPA makes final payment under the Contract.

PROVIDED further that, during any interim period after the JPA has declared Contractor to be in default but Surety has not yet remedied the default in the manner chosen by the JPA, Surety shall be responsible for securing and protecting the work site including, but not limited to, the physical premises, structures, fixtures, materials, and equipment, and shall be responsible for securing and protecting materials and equipment stored off-site.

PROVIDED further that, no right of action shall accrue on this bond to or for the use of any person or corporation other than the JPA named herein or the heirs, executors, administrators or successors of the JPA.

IN WITNESS WHEREOF, the said Principal and the said Surety have duly executed this bond the ____ day of _____, 20____.

ATTEST: **ATTEST:**

By:_____ **By:_____**
Its **Its**
AS PRINCIPAL

SIGNED, SEALED AND DELIVERED
IN THE PRESENCE OF:

ATTEST: **ATTEST:**

By:_____ **By:_____**
Its **Its**
AS SURETY

NAME OF AGENT:_____

ADDRESS:_____

TELEPHONE NO: (___)_____ FACSIMILE NO: (___)_____

Countersigned:

By:_____ **Bond I.D. No:_____**
State of Florida

Name of Firm:_____

Address:_____

NOTE: DATE OF BOND MUST NOT BE PRIOR TO DATE OF CONTRACT.

CONTRACT NUMBER MC-2132
PAYMENT BOND
CONTRACT BOND REQUIRED
BY SECTION 255.05, FLORIDA STATUTES

Bond No._____

As to the Contractor/Principal:

Name: _____

Principal Business Address:_____

_____

Telephone:_____

As to the Surety:

Name: _____

Principal Business Address:_____

_____

Telephone:_____

As to the Owner of the Property/Contracting Public Entity:

Name: _____

Principal Business Address:_____

_____

Telephone:_____

Description of project including address and description of improvements:

_____

_____

Contractor and Surety are each held and firmly bound unto the Jacksonville Port Authority, as a group, and each member individually, as Obligee (hereinafter called Owner), in the amount of _____ DOLLARS *($_____)* , lawful money of the United States of America, for the payment whereof Contractor and surety bind themselves, their respective heirs, executors, administrators, legal representatives, successors and assigns, jointly and severally, firmly by these presents.

WHEREAS, Contractor and Owner have by written agreement dated the ____ day of _____, 20_____, entered into a contract for **MC-2132, INSTALLATION OF NEW CRANE STOW PIN SOCKETS AT TMT,** all of said work required to be done in strict compliance with the drawings, plans and specifications prepared by the Jacksonville Port Authority Engineering and Construction Department for said work and in strict compliance with the requirements of the contract and all documents included as a part of the contract (hereinafter referred to collectively as the Contract), all of which are by reference made a part hereof to the same extent as if fully set out herein.

Promptly makes payments to all lienors or claimants supplying labor, materials and supplies used directly or indirectly by Contractor in the prosecution of the work provided for in the Contract, including any authorized extensions or modifications thereof, then this bond is void; otherwise, it remains in full force and effect.

PROVIDED, that the Surety hereby waives notice of any alteration or extension of time made by the Owner, and any changes in or under the Contract and compliance or noncompliance with any formalities connected with the Contract or with the changes do not affect Surety's obligation under this bond.

PROVIDED, further, that no action shall be instituted or prosecuted against the Contractor or the Surety on the bond after one (1) year from the performance of the labor or completion of delivery of the materials or supplies, or the date the rental equipment was last on the jobsite available for use.

IN WITNESS WHEREOF, the said Principal and the said Surety have duly executed this bond the ____ day of _____, 20____.

ATTEST: **ATTEST:**

By: _____ **By:_____**

Its **Its PRINCIPAL**

SIGNED, SEALED AND DELIVERED IN THE PRESENCE OF:

ATTEST: **ATTEST:**

By: _____ **By:_____**

Its **Its SURETY**

NAME OF AGENT: _____

ADDRESS: _____

TELEPHONE NO. (___)_____ **FACSIMILE NO: (___)_____**

Countersigned:

By: _____ **Bond I.D. No: _____**
State of Florida

Name of Firm: _____

Address: _____

<u>NOTE: DATE OF BOND MUST NOT BE PRIOR TO DATE OF CONTRACT.</u>

SCOPE OF WORK

FOR

INSTALLATION OF NEW CRANE STOW PIN SOCKETS AT TMT

Project No.: T2027.01

Contract No.: MC-2132

TALLEYRAND MARINE TERMINAL

JAXPORT

JACKSONVILLE PORT AUTHORITY

STATEMENT OF WORK

INSTALLATION OF NEW CRANE STOW PIN SOCKETS
TALLEYRAND MARINE TERMINAL

Facility	Talleyrand Marine Terminal (TMT) — 2831 Talleyrand Avenue, Jacksonville, FL 32206
Owner	Jacksonville Port Authority (JAXPORT)
Contract No.	MC-2132
Project No.	T2027.01
Solicitation Status	Issued for Bid
Structure Limits	Crane Stow Pin Sockets at Ft Marker 1565 (Berth 7) & Ft Marker 1720 (Berth 6)
Basis of Contract	Lump sum; 90 calendar days NTP to Substantial Completion
Installation Basis	Install 4 (ea) stow pin sockets at ft marker 1565 Install 4 (ea) stow pin sockets at ft marker 1720
Source Documents	Drawings: TMT_Installation of New Crane Stow Pin_S-1 to S-5_2024-08-07 SOW: T2023-04_MC-1898RR New Stow Pin Sockets
Prepared For	JAXPORT – Engineering & Construction
Prepared By	Brandon Braziel

1. Project Description

The purpose of this project is to install two new sets of stow pin sockets used for securing the dockside gantry cranes at the wharf location indicated on the contract drawings. All work is on the Talleyrand Marine Terminal (TMT) located at 2813 Talleyrand Avenue, Jacksonville, FL 32206.

2. Scope

2.1 Contractor shall provide labor, materials, equipment, incidentals, and supervision necessary to perform the proper fabrication and installation of eight (8) individual stow pin sockets — four (4) sockets at each of two locations — as indicated in the contract drawings.

2.2 General Scope

2.2.1 All work to be performed shall comply with all applicable codes, standards, and regulations, including, but not limited to applicable sections of the following documents:

- ANSI A10.6, 6th Edition, 2016 - Safety & Health Program Requirements for Demolition Operations - American National Standard for Construction and Demolition Operations
- Occupational Safety and Health Administration (OSHA) Standards
- EPA (Environmental Protection Agency) - NESHAP
- FDEP (Florida Department of Environmental Protection).

2.2.2 A Transportation Worker Identification Credential TWIC® is required for all workers accessing or working on the site.

2.2.3 The contractor, its employees, and subcontractors shall become familiar with and obey all governing regulations. All personnel employed on the project shall keep within the limits of

the work (and avenues of ingress and egress) and shall not enter other areas unless required to do so, and authorization is obtained for each entry. The Contractor shall use as working, staging, storage, and laydown areas, only those areas identified in the project drawings or assigned by JAXPORT. The contractor's equipment shall be marked for identification.

2.2.4 Contractor personnel shall park their privately-owned vehicle (POV) in the parking lot adjacent to the 11th Street entrance to the Talleyrand Marine Terminal. The contractor shall provide a shuttle service for its personnel from this lot to the work site. The Contractor shall access the work area, using only the access route identified in the project drawings.

2.2.5 Contractor shall install temporary cones or barricades around the perimeter of the work areas, before beginning any demolition activities. At the end of the shift or during vessel operations the area shall be made safe for vessel and personnel conducting normal cargo operations by all means necessary. Secured steel plates or temporary backfill may be necessary and shall not affect operations or gantry crane movements.

2.2.6 Contractor shall provide all temporary facilities, locked toolboxes and containers, and temporary utilities. Should the Contractor require utility water, it shall coordinate with JAXPORT. JAXPORT will coordinate with the contractor at the Pre-Construction meeting to assign an appropriate-sized laydown area in the vicinity of the work area.

2.2.7 Contractor shall clean the project site and work areas daily and dispose of materials lawfully.

2.3 Pre-Work Submittals

Do not begin any mobilization or onsite work until all Pre-Work Submittals specified in Section 3 below have been submitted to and approved by JAXPORT and JAXPORT issues a Notice to Proceed with the work.

2.4 Vessel Schedule

Port and Tenant operations take precedence over the work included in the Scope of this project. No Work will be allowed while a vessel is docked in the proximity of the work area. In performing the Work, the Contractor shall accommodate and work around vessel schedules and vessel traffic, so as to not impede any vessel movements. A daily vessel master plan will be available from JAXPORT Vessel Planning Department. A "Compensable Delays" item has been included in the Bid Form. "Compensable Delay" is defined as: specific delays attributable to Owner or Tenant-responsible causes that result in a delay in completion of the overall project, and said delays were not concurrent with delays experienced by the contractor. In all cases, the Contractor is to exercise all reasonable efforts to remain productive and to accommodate JPA and Tenant operations. The unit price for "Compensable Delays" will be applied as sole compensation in those instances where compensable delays occur and result in Contractor's right for compensatory damages, in accordance with the definition above for "Compensable Delays".

2.5 Coordination

All coordination shall be through JAXPORT's Project Manager, Brandon Braziel, the Talleyrand Marine Terminal Operations Manager, Ronald Alford, the Talleyrand Asset Manager, Brandon Blanton, and the Vessel Planning Manager, Barry Nelson.

2.6 Precautions

Take necessary precautions to avoid damage to existing items to remain in place (if any), to be reused, or to remain the property of JAXPORT. Construct and maintain shoring, bracing, and supports as required. Ensure that structural elements are not overloaded. Increase structural supports or add new supports as may be required as a result of any cutting, removal, and dismantling work performed under this contract.

2.7 Dust/Slurry Control

Prevent the spread of dust, slurry and debris and avoid the creation of a nuisance or hazard in the surrounding area and prevent damage to cargo. Do not use water for dust suppression if it would result in the creation of hazardous substances or objectionable conditions such as, but not limited to, flooding, or pollution. The Contractor shall be responsible for any costs arising from a lack of proper dust control.

2.8 MOT Safety

Where pedestrian and driver safety are endangered in the area of removal work, use traffic barricades with flashing lights. Anchor barricades in a manner to prevent displacement by the wind.

2.9 Disposal of Debris

Dispose of debris, rubbish, scrap, and other non-salvageable materials resulting from demolition operations in accordance with all applicable federal, state and local statutes and regulations, and in rubbish dumpsters provided by the Contractor. JAXPORT will not supply dumpsters. The contractor shall not allow demolition debris to enter the water. Do not bury or burn waste materials on-site. Do not wash waste materials down sewers or into waterways. Comply with all applicable federal, state, and local waste disposal laws and regulations.

3. Submittals

JAXPORT shall have fourteen (14) calendar days to review and either approve or reject Pre-Work Submittals. Submit the following prior to any mobilization or onsite work:

3.1 Pre-Work

- Performance and Payment Bonds
- Certificate of Insurance
- Demolition Plan - Prepare and submit a Demolition Plan discussing proposed procedures. Review and approval of the Demolition Plan shall not relieve the Contractor of its responsibilities or obligations for the work as specified in the contract documents or for compliance with all applicable laws, statutes, regulations, ordinances, or standards. At a minimum, the Plan shall address the following:
- Procedures for careful removal and disposition of materials specified to be salvaged (if any),
- A detailed description of methods and equipment to be used and the sequence of operations,
- Procedures for the safe conduct of the work in accordance with the Contractor's corporate safety plan.
- Details of stockpile areas, storage areas, and temporary barricades as may be necessary,
- Details and description of any temporary structures (if needed) and all equipment to be used for the demolition and removal work for the disposal of waste and debris.
- SWPPP - Submit a SWPPP (Storm Water Pollution Prevention Plan) identifying the best management practices that the Contractor will implement to prevent contamination of stormwater collection structures in the vicinity of the demolition work.
- Maintenance of Traffic (MOT) plan
- Safety Plan
- Shop Drawings for Pin Sockets
- Shop Drawings for Reinforcement & Mechanical Connectors
- Others – as required in the Project General and Special Condition

3.2 Post-Work

Concrete Testing: The Contractor is responsible for concrete testing. Refer to the plans and specifications referenced for further requirements. The frequency of testing will be every 10-yard truck. The initial truck of the days batching will be sampled with 7, 14, and 28-day cylinders, subsequent trucks of the same batching will only require 28-day cylinders. The Contractor must use a reputable local testing agency that attains all required applicable certifications; the testing agency must not have any conflict of interest with the Contractor. These tests will be submitted as final records for the project.

4. Work Hours

Unless otherwise directed or approved by JAXPORT, work hours are 6 am – 7 pm, or as the vessel schedule allows. Port and tenant operations take precedence over the works included in the Scope of this

project. In performing the Work, the Contractor shall accommodate and work around vessel schedules. The contractor must work around scheduled vessel traffic to not impede any vessel movements or tenant operation.

5. Contract Time

The Contractor shall complete all demolition and restoration work no later than 90 calendar days after JAXPORT issues a Notice to Proceed (NTP) with construction activities. An administrative NTP may be issued to allow the contractor to submit shop drawings and fabricate long lead time items.

6. Exhibits

6.1 Contract Drawings

6.1.1 T2027.01_MC-2132_ Drawings

This document was prepared with assistance from Agentic AI Tools and has been reviewed and approved by Brandon Braziel.

ATTACHMENT NO. 2

DRAWINGS

FOR

INSTALLATION OF NEW CRANE STOW PIN SOCKETS AT TMT

Project No.: T2027.01

Contract No.: MC-2132

TALLEYRAND MARINE TERMINAL

JACKSONVILLE PORT AUTHORITY

TALLEYRAND MARINE TERMINAL
INSTALLATION OF NEW CRANE STOW PIN SOCKETS

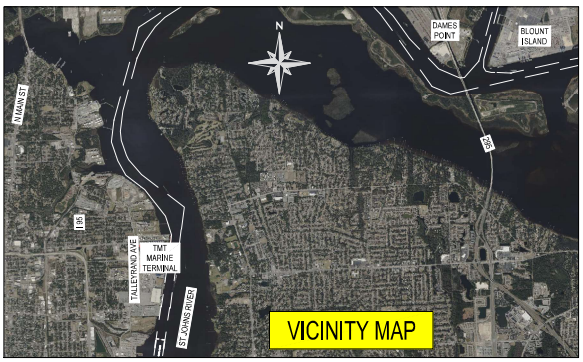

JPA CONTRACT No.: MC-2132
JPA PROJECT No.: T2027.01

LEGEND	
SHEET #:	SHEET DESCRIPTION
S-1	TITLE, VICINITY & LOCATION MAP
S-2	STRUCTURAL NOTES
S-3	OVERALL WHARF PLAN, NOTES & LEGEND
S-4	TYPE A - ENLARGED PLAN, SECTION & DETAILS
S-5	UNIVERSAL DETAILS

NORTH	TALLEYRAND MARINE TERMINAL INSTALLATION OF NEW CRANE STOW PIN SOCKETS	CONTRACT No.: MC-2132	VERSION ISSUED FOR BID	JAXPORT ENGINEERING & CONSTRUCTION DEPARTMENT 2831 TALLEYRAND AVENUE JACKSONVILLE, FL 32206	DATE 9-22-2026 SCALE NTS SHEET S-1

CODES AND REFERENCES

1. BUILDING CODE REQUIREMENTS FOR REINFORCED CONCRETE, ACI 318-08.
2. WELDING OF STRUCTURAL STEEL COMPONENTS SHALL CONFORM TO THE REQUIREMENTS OF THE STRUCTURAL WELDING CODE - STEEL, ANSI/AWS D1 .1-98.
3. WELDING OF REINFORCING STEEL SHALL CONFORM TO THE REQUIREMENTS OF THE STRUCTURAL WELDING CODE - REINFORCING STEEL, ANSI/AWS D1 .4-92.
4. AISC MANUAL OF STEEL CONSTRUCTION, ALLOWABLE STRESS DESIGN, 9TH EDITION.
5. FDOT STANDARD SPECIFICATIONS FOR ROAD AND BRIDGE CONSTRUCTION, FY 2026-27 AND SUPPLEMENTS.

DESIGN LOADS

1. CRANE STOW PIN FORCES

	ULTIMATE LOAD
STOW PINS	250^{k} PER LOAD

MATERIALS

1. CONCRETE:
A. CONCRETE COMPRESSIVE STRENGTH AT 28 DAYS, UNLESS OTHERWISE NOTED: CAST-IN-PLACE CONCRETE: 5500 PSI PER FDOT SPECIFICATION FOR ROAD AND BRIDGE CONSTRUCTION.
- AGGREGATE SIZE# 89 STONE.
- MAXIMUM WATER/CEMENT RATIO 0.40.
- THE CONTRACTOR MAY SITE MIX NON-SHRINK GROUT IN LIEU OF READY MIX CONCRETE. GROUT SHALL BE NON-METALLIC, NON-SHRINK, PRE-PACKAGED WITH A MINIMUM 28 DAY COMPRESSIVE STRENGTH OF 8,000 PSI.

B. REINFORCING STEEL:
DEFORMED BARS: ASTM A615 GRADE 60, FY= 60 KSI
2. STRUCTURAL STEEL:
A. MISC. ROLLED PLATES AND SHAPES: ASTM A36, FY= 36 KSI, UNLESS OTHERWISE NOTED.
3. SHOP DRAWINGS:
A. SHOP DRAWINGS (INCLUDING PRODUCT SPECIFICATIONS AND INSTALLATION PROCEDURES) SHALL BE SUBMITTED FOR REVIEW BY THE ENGINEER FOR ALL MATERIALS PRIOR TO INSTALLATION.

SCOPE OF WORK

THE SCOPE OF THIS PROJECT CONSISTS OF THE INSTALLATION OF NEW STOW PIN SOCKETS FOR SECURING THE DOCKSIDE GANTRY CRANES AT LOCATIONS INDICATED ON THE DRAWINGS. THE WORK WILL INCLUDE DEMOLITION OF THE EXISTING CONCRETE BY HIGH PRESSURE WATER BLASTING OR ASPHALT REMOVAL AND REPLACEMENT AS INDICATED IN THE SPECIFIC DETAILS. THE NEW FABRICATED STEEL SOCKETS WILL BE INSTALLED IN CONCRETE AS INDICATED ON THE DRAWINGS. EXISTING REINFORCING STEEL SHALL BE CUT AND REPLACED AS INDICATED ON THE DRAWINGS. ANY DEVIATION TO THE PROPOSED WORK FROM THAT INDICATED ON
THE DRAWINGS SHALL BE APPROVED BY THE ENGINEER PRIOR TO COMMENCING WITH CONSTRUCTION.
THE CONTRACTOR SHALL PHASE HIS WORK TO MINIMIZE DISTURBANCE OF EXISTING PORT OPERATIONS. NO INTERRUPTION OF CRANE OPERATION THROUGH THE CONTRACTOR WORK AREA WILL BE PERMITTED WITHOUT WRITTEN AUTHORIZATION FROM THE JACKSONVILLE PORT AUTHORITY PROJECT MANAGER.

GENERAL

1. EXISTING CONDITIONS SHOWN ARE AN APPROXIMATE REPRESENTATION OF ACTUAL CONDITIONS AND ARE NOT INTENDED TO BE EXACT.
2. DIMENSIONS ARE NOT TO BE SCALED OFF DRAWINGS. ACTUAL SITE CONDITIONS WILL VARY.

DEMOLITION

1. DEMOLITION OF CONCRETE IS TO BE PERFORMED BY HAND CHIPPING (LESS THAN 40 LB HAMMERS) OR HYDROBLASTING. NO OTHER METHOD OF
CONCRETE DEMOLITION WILL BE CONSIDERED.
2. EXISTING REINFORCING IS TO REMAIN UNDAMAGED AND IN PLACE. EXISTING REINFORCING IS TO BE CUT ONLY AS REQUIRED TO PLACE STOW PIN SOCKETS.
3. EXTENTS OF DEMOLITION SHOWN ARE MINIMUMS UNLESS OTHERWISE NOTED.
4. ALL EXISTING CONCRETE SURFACES WHICH ARE TO HAVE FRESH CONCRETE POURED AGAINST THEM ARE TO BE ROUGHENED TO A MINIMUM AMPLITUDE OF ¼"
5. IN THE EVENT THAT SITE CONDITIONS DIFFER FROM CONTRACT PLANS NOTED MAXIMUM DEMOLITION EXTENTS ARE TO BE EXCEEDED, OR ADDITIONAL EXISTING REINFORCING IS TO BE CUT, CONTACT ENGINEER OF RECORD FOR APPROVAL PRIOR TO PROCEEDING.

REINFORCEMENT PLACEMENT NOTES

1. CONCRETE COVER FOR REINFORCING STEEL SHALL BE 2½" UNLESS SHOWN OTHERWISE.
2. ADDITIONAL REINFORCING STEEL AND/OR CONCRETE THICKNESS MAY BE REQUIRED. IN SUCH AN EVENT, CONTRACTOR SHALL PROVIDE ADDITIONAL REINFORCING AND/OR CONCRETE AT NO ADDITIONAL COST TO JAXPORT.
3. SPLICES, HOOKS AND BENDS SHALL CONFORM TO THE LATEST ADDITION OF ACI-318. ALL BENDS AND HOOKS SHALL BE ACI 318 STANDARD 90° OR 180° HOOKS UNLESS DETAILED OTHERWISE.
4. SHOP DRAWINGS SHALL BE PREPARED IN ACCORDANCE WITH THE LATEST VERSION OF THE ACI DETAILING MANUAL AND SHALL BE SUBMITTED TO THE PROJECT MANAGER FOR APPROVAL PRIOR TO COMMENCING WORK. METHOD OF SUPPORTING LAYERS OF REINFORCING STEEL SHALL BE CLEARLY SHOWN ON SHOP DRAWINGS.
5. LAP SPLICES SHALL CONFORM TO THE FOLLOWING:

SCHEDULE OF SPLICE LENGTHS

BAR SIZE	TOP BARS *	BOTTOM BARS
4	2'-4"	1'-10"
5	2'-11"	2'-3"
6	3'-3"	2'-8"
8	5'-0"	4'-3"
10	7'-3"	5'-7"

NOTES
1. THESE VALUES ARE BASED ON CLASS "B" SPLICES
2. TOP BARS ARE DEFINED AS ANY HORIZONTAL BAR PLACED SUCH THAT MORE THAN 12" OF FRESH CONCRETE IS CAST IN THE MEMBER BELOW THE BAR IN ANY SINGLE POUR.

6. MECHANICAL SPLICES SHALL BE BAR SPLICE PRODUCTS, INC TAPER THREATED GRIP-TWIST OR EQUAL.
7. BARS SHOWN OR CALLED OUT AS "DRILL & EPOXY" SHALL BE EPOXY EMBEDDED INTO THE EXISTING CONCRETE IN ACCORDANCE WITH ALL MANUFACTURERS RECOMMENDATIONS AND THE SPECIFICATIONS. THE MINIMUM EMBEDMENT DEPTH SHALL BE AS SHOWN IN THE TABLE:

SCHEDULE OF REINFORCEMENT EPOXY EMBEDMENT DEPTHS

BAR SIZE	MINIMUM EMBEDED DEPTH
10	12"

INSTALLATION OF STOW PIN SOCKETS

1. STOW PIN SOCKETS MUST BE INSTALLED IN THE EXACT LOCATION SHOWN ON PLANS.
2. STOW PINS SOCKETS ARE TO BE INSTALLED FLUSH WITH EXISTING CONCRETE SURFACE.
3. STOW PIN SOCKETS MAY BE ROTATED TO AVOID REINFORCING PROVIDED CENTER OF STOW PIN SOCKET REMAINS LOCATED AS SHOWN ON PLANS. TOLERANCE +/- 1/4" 0-GAUGE RAIL TO 50-GAUGE RAIL, +/- 1/8" POCKET TO POCKET CL ALIGNMENT ON SAME RAIL.

STRUCTURAL LEGEND

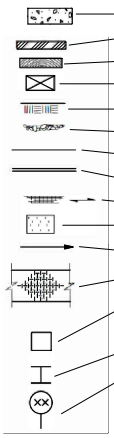

JAXPORT JACKSONVILLE PORT AUTHORITY	TALLEYRAND MARINE TERMINAL INSTALLATION OF NEW CRANE STOW PIN SOCKETS	CONTRACT No.: MC-2132	VERSION ISSUED FOR BID	JAXPORT ENGINEERING & CONSTRUCTION DEPARTMENT 2831 TALLEYRAND AVENUE JACKSONVILLE, FL 32206	DATE 9-22-2026 SCALE NTS SHEET S-2

* L:\Mar_ecy\Projects In Development\03 TMT\188 - TMT_INSTALLATION OF STOW PIN SOCKETS_2026-09-23\TMT_INSTALLATION OF NEW CRANE STOW PIN_2026-9-22.dwg, Sep 22, 2026 - 10:55:36AM, cmacdray

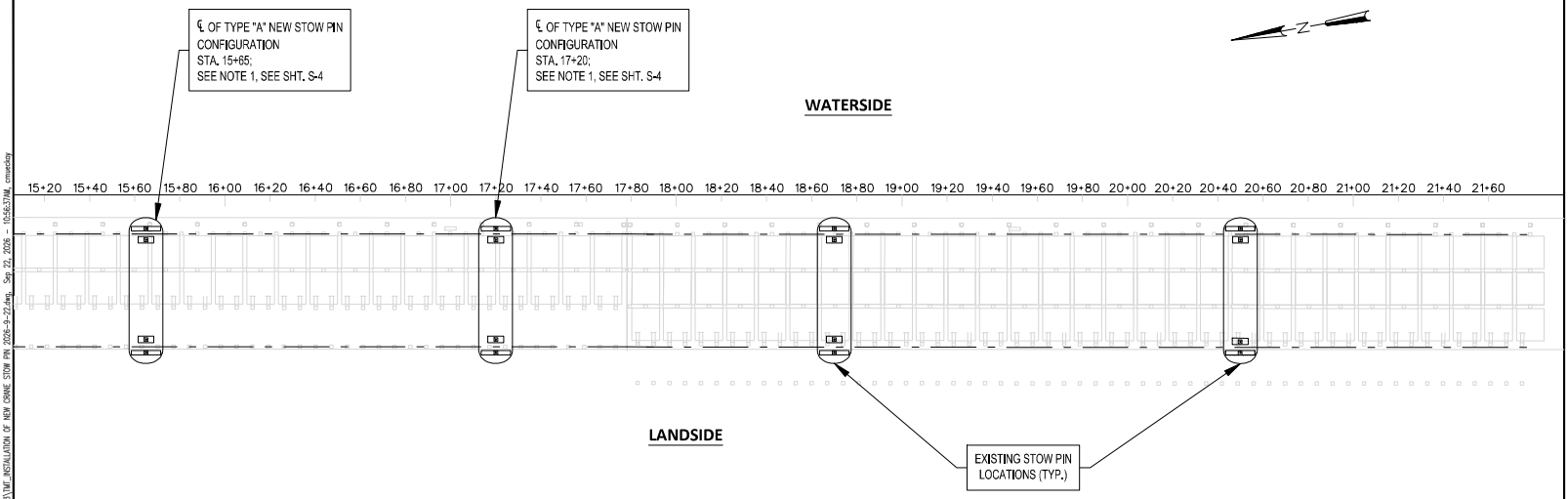

PLAN VIEW

NOTE 1: PRIOR TO BEGINNING DEMOLITION
COORDINATE EXACT STATION LOCATION WITH OWNER.

JAXPORT JACKSONVILLE PORT AUTHORITY	NORTH	TALLEYRAND MARINE TERMINAL INSTALLATION OF NEW CRANE STOW PIN SOCKETS	CONTRACT No.: MC-2132	VERSION ISSUED FOR BID	JAXPORT ENGINEERING & CONSTRUCTION DEPARTMENT 2831 TALLEYRAND AVENUE JACKSONVILLE, FL 32206	DATE	9-22-2026
						SCALE	NTS
						SHEET	S-3

H:\Mar_eng\Projects in Development\03 TMT\BB - TMT_INSTALLATION OF STOW PIN SOCKETS_2026-09-23\TMT_INSTALLATION OF NEW CRANE STOW PIN 2026-9-22.dwg, Sep 22, 2026 - 10:56:37AM, cmseclay

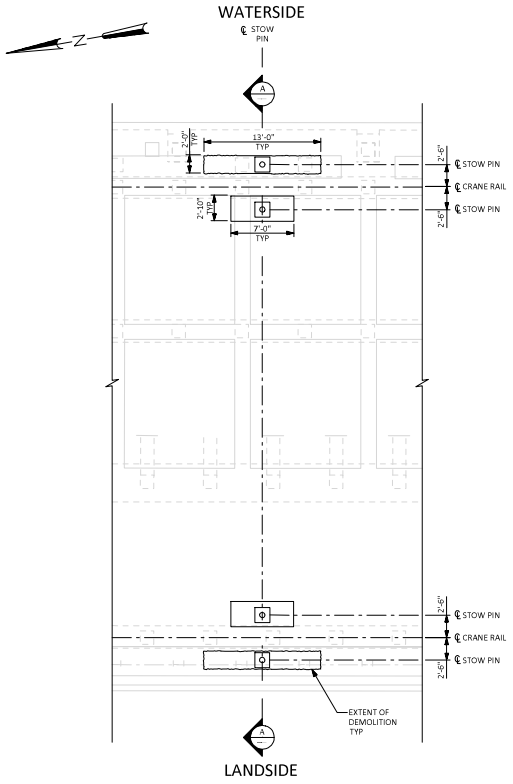

PLAN - TYPE A STOW PIN CONFIGURATION

NTS

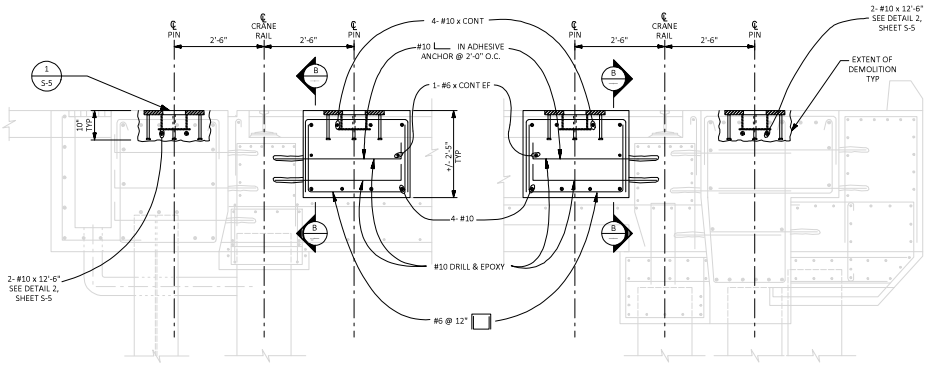

LANDSIDE

A - SECTION - STOW PIN

NTS

WATERSIDE

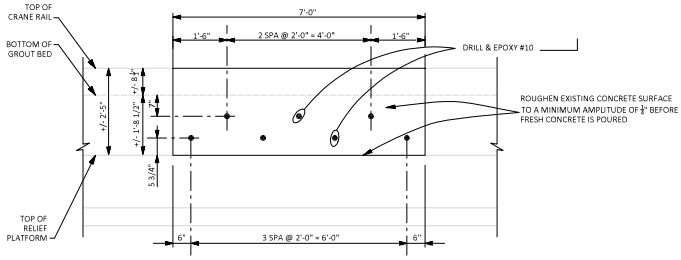

DOWEL ELEVATION

B - SECTION - STOW PIN

NTS

JAXPORT JACKSONVILLE PORT AUTHORITY	NORTH	TALLEYRAND MARINE TERMINAL INSTALLATION OF NEW CRANE STOW PIN SOCKETS	CONTRACT No.: MC-2132	VERSION ISSUED FOR BID	JAXPORT ENGINEERING & CONSTRUCTION DEPARTMENT 2831 TALLEYRAND AVENUE JACKSONVILLE, FL 32206	DATE 9-22-2026 SCALE NTS SHEET S-4

H:\Mar_eng\Projects in Development\03 TMT\BB - TMT_INSTALLATION OF STOW PIN SOCKETS_2026-09-23\TMT_INSTALLATION OF NEW CRANE STOW PIN 2026-9-22.dwg, Sep 22, 2026 - 10:57:50AM, cmuecksy

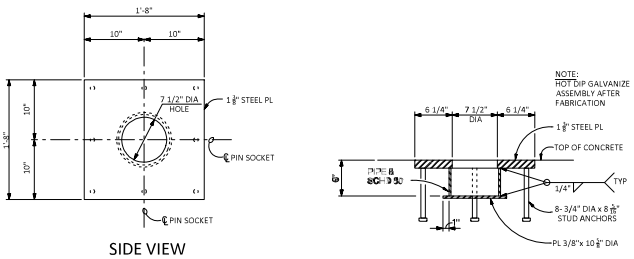

SIDE VIEW

PIN SOCKET DETAIL 1 S-5

NTS

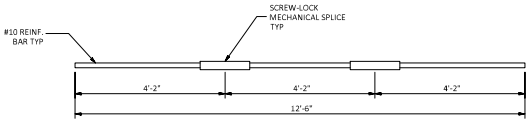

NOTES:
REINFORCING MECHANICALLY SPLICED TO ALLOW FOR INSTALLATION BELLOW TOP LAYERS OF EXISTING REINFORCING

ADDITIONAL # 10 REINFORCING BAR DETAIL 2 S-5

NTS

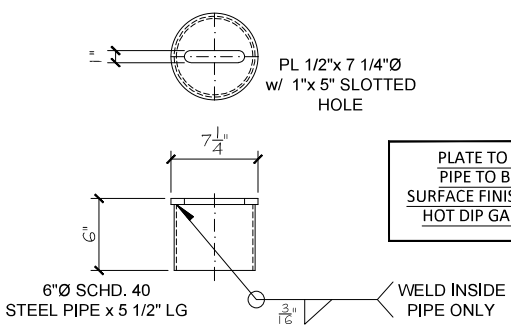

PLATE TO BE A36;
PIPE TO BE A54B;
SURFACE FINISH SSPC-SP2
HOT DIP GALVANIZED

STOW PIN COVER

NTS

JAXPORT JACKSONVILLE PORT AUTHORITY	NORTH	**TALLEYRAND MARINE TERMINAL INSTALLATION OF NEW CRANE STOW PIN SOCKETS**	CONTRACT No.: MC-2132	VERSION ISSUED FOR BID	JAXPORT ENGINEERING & CONSTRUCTION DEPARTMENT 2831 TALLEYRAND AVENUE JACKSONVILLE, FL 32206	DATE 9-22-2026 SCALE NTS SHEET S-5

H:\Mar_eng\Projects in Development\03 TMT\BB - TMT_INSTALLATION OF STOW PIN SOCKETS_2026-09-23\TMT_INSTALLATION OF NEW CRANE STOW PIN 2026-9-22.dwg, Sep 22, 2026 - 11:14:07AM, cmuecksy