The JAXPORT EXPRESS Project

**EX**emplifying **P**otential to **R**educe **E**missions with **S**ustainable **S**olutions

US Department of Transportation

Maritime Administration
Port Infrastructure Development Program (PIDP)

# Appendix G: Equipment Specifications

- **Chargepoint Express Plus**
- **Mi-Jack 1400-P Gantry Crane**
- **Wiggins Yard E-Bull**
- **Taylor XLC-975**
- **Crowley Equipment Specs**
- **ABB Terra Specs**

Per the instructions in the official Notice of Funding Opportunity: "If possible, website links to supporting documentation should be provided rather than copies of these supporting materials." Please find all supporting documentation at this link: https://www.jaxport.com/grants

# ChargePoint® Express Plus

**A flexible DC Fast Charging platform that grows with you.**

# Express Plus Specifications

## Express Plus Power Module

### Express Plus Power Module Output

| | |
|---|---|
| Max Output Power | 40 kW |
| Max Output Current | 100 A |
| Power Conversion Efficiency | Up to 96% |
| Power Factor | 0.99 at full load |

### Express Plus Power Module Specifications

| | |
|---|---|
| Power Module Dimensions | 430 mm (H) x 130 mm (W) x 760 mm (L) (1’5” x 5” x 2’6”) |
| Power Module Weight | 45 kg (98.5 lb.) |
| Power Module Cooling | Liquid Cooled Technology |
| Harmonics | iTHD < 5% (Complies with IEEE 519) |

## Express Plus Power Block

### Express Plus Power Block Input

| | |
|---|---|
| Input Rating | 3-phase, 400-480Y VAC, 310-260 A 50/60 Hz |
| Wiring | L1, L2, L3, Earth |
| Short Circuit Current Rating | 65 kA |

### Express Plus Power Block Output

| | |
|---|---|
| Max Output Power | 200 kW |
| Output Voltage, Charging | 200 V – 1000 V |
| Max Current per Output | 200 A, 250 A, 300 A, 350 A, 500 A* |
| Number of Stations Served | One Power Block can serve up to 2 Power Link stations. Additional Power Blocks can be added to serve more stations or increase power output. |
| Max Power Modules per Power Block | 5 |

* Subject to site configuration and installed stations

### Express Plus Power Block Specifications

| | |
|---|---|
| Power Block Dimensions | 2191 mm (H) x 988 mm (W) x 1039 mm (L) (7’3” x 3’3” x 3’5”) |
| Power Block Weight | 455 kg (1000 lbs.) without Power Modules |
| Power Block Enclosure Rating | Type 3R, IP56 |

## Express Plus Power Link

### Express Plus Power Link Output

| | |
|---|---|
| Max Output Power | 200 kW, 250 kW, 300 kW, 350 kW with Power Blocks |
| Output Voltage, Charging | 200 V – 1000 V |
| CCS1 Max Output Current** | Option 1: 200 A continuous with Power Blocks<br>Option 2: 375 A peak, 350 A continuous with Power Blocks |
| CCS2 Max Output Current** | Option 1: 250 A continuous with Power Blocks<br>Option 2: 375 A peak, 300 A continuous with Power Blocks |
| CHAdeMO Max Output Current** | Option 1: NA & EU: 200 A continuous with Power Blocks<br>Option 2: NA: 140 A, EU: 125 A continuous with Power Blocks |

**Availability may vary

### Express Plus Power Link Specifications

| | |
|---|---|
| Station Dimensions | 2400mm (H) x 720mm (W) x 280mm (D) (7’11” x 2'5" x 11") |
| Station Footprint | 965mm (W) x 635mm (D) (3'2" x 2'1") with Cable Management Kit |
| Station Weight | 250 kg (550 lbs) |
| Number of Connectors | Up to 2 connectors per station |
| Supported Connector Types | CHAdeMO, CCS1 (SAE J1772™ Combo), CCS2 (IEC 61851-23) |
| Cable Length | Standard 4.5 m (15') with Cable Management Kit (CMK).* Optional lengths of 7.6 m (25’) and 10 m (33’) also available. |
| Station Enclosure Rating | Type 3R, IP56 |
| Locking Holster | Yes |
| Mounting Type | Ground, Wall, Overhead |

*Horizontal reach to typical vehicle charging port is 3.6 m (12 ft)

## Functional Interfaces

| | |
|---|---|
| LCD Display | Full-color 200 mm (8”) LCD display (optional) |
| Authentication | RFID: ISO 15693, ISO 14443, NEMA EVSE 1.2-2015 (UR)<br>Tap to Charge (NFC on Apple & Android)<br>15118-2 (EIM)<br>Remote: Mobile and in vehicle (if supported by vehicle) |

## Connectivity Features

| | |
|---|---|
| Local Area Network | 2.4 GHz and 5 GHz WiFi (802.11 b/g/n) |
| Wide Area Network | 4G LTE |
| Supported Communication Protocols | OCPP 2.0 |
| Service and Maintenance | Remote system monitoring, diagnostic, and proactive maintenance |

## Safety and Operational Ratings

| | |
|---|---|
| Vehicle Safety Communication | CHAdeMO – JEVS G104 over CAN, CCS1 – SAE J1772 over PLC and CCS2 — IEC 61851-23 |
| Plug-In Detection | Power terminated per JEVS G104 (CHAdeMO), SAE J2931 (CCS1) and IEC 61851-23 (CCS2) |
| Safety Compliance | Complies with UL 2202, UL 2231-1, UL 2231-2, CSA 107.1 Shipped product will be UL and cUL listed.<br>Complies with IEC 61851-1 and IEC 61851-23. Shipped product will be CE marked. |
| Surge Protection | Tested to IEC 61000-4-5, Level 5 (6 kV @ 3,000A). In geographic areas subject to frequent thunderstorms, supplemental surge protection at the service panel is recommended. |
| EMC Compliance | U.S and Canada: FCC 15 subpart A Class A; EU: EN55011, EN55022 and IEC61000-6-3 Class B |

## Generic Specifications

| | |
|---|---|
| Operational Altitude | <3,000 m (<9,800 ft) |
| Operating Temperature | -40°C to 50°C (-40°F to 122°F) |
| Storage Temperature | -40°C to 70°C (-40°F to 158°F) |

| | |
|---|---|
| Operating Humidity | Up to 95% @ 50°C (122°F) non-condensing |

## Energy Management Features

| | |
|---|---|
| Dynamic Power Management | Allows a fixed maximum power output per station or lets the system dynamically manage the power distribution per station. |
| Remote Energy Management | Manage output power via the ChargePoint Admin Portal, API, and Open ADR 2.0b VEN. |

## Hardware Ordering Information

The order codes below represent common product configurations. Other product options are available upon request. Please contact ChargePoint Sales for information and order codes. All SKU's displayed include standard cable management and mounting kit. Note, Power Link and Power Block current ratings must match. Eg. 250 A with 250A, 200 A with 200 A.

| Description | | Order Code |
|---|---|---|
| Commercial Models | Express Plus Power Block, 350 A or 300 A rated output | EXPP-PB1000-350A-PD or EXPP-PB1000-300A-PD |
| | Express Plus Power Link, North America version, 1x CCS1 350 A cable, 1x CHAdeMO 200 A cable, Pedestal, with display | EXPP-PL1021A-5A1S1-2A3S1 |
| | Express Plus Power Link, Europe/UK version, 1x CCS2 300 A cable, 1x CHAdeMO 200 A cable, Pedestal, with display | EXPP-PL1121B-4A2S1-2A3S1 |
| Fleet Models | Express Plus Power Block, 250 A or 200 A rated output | EXPP-PB1000-250A-PD or EXPP-PB1000-200A-PD |
| | Express Plus Power Link NA Version. 1x CCS1 200A 4.5m cable, Pedestal, No display. | EXPP-PL1011X-2A1S1 |
| | Express Plus Power Link NA Version. Same as above but with 2x CCS1 Connectors | EXPP-PL1021X-2A1S1-2A1S1 |
| | Express Plus Power Link Europe/UK Version. 1x CCS2 250A 4.5m cable, Pedestal, No display. | EXPP-PL1111X-3A2S1 |

| | | |
|---|---|---|
| | Express Plus Power Link Europe/UK Version. Same as above but with 2x CCS2 | EXPP-PL1121X-3A2S1-3A2S1 |

## Hardware Ordering Information, Cont.

| Description | | Order Code |
|---|---|---|
| Other Connector Options | Cable connectors available include CCS1, CCS2, and/or CHAdeMO. Cables can be ordered with a single or a combination, as well as lengths and amperage depending on application. | Please contact ChargePoint Sales for assistance in ordering |
| Power Module | EXPP Power Module | EXPP-PM-40kW |
| Mounting & Template Options | Mounting kits and templates for various mounting are available | Please contact ChargePoint Sales for assistance in ordering |
| Buy America | Buy America (FTA & FHWA) options available upon request | Add -FTA or -FHWA to part numbers above |

## Software & Services Ordering Information

| Description | Order Code |
|---|---|
| ChargePoint Enterprise Cloud Plan (Commercial) *Note: One token per vehicle. Station activation is included in this plan.* | CPCLD-ENTERPRISE-EXPP-n* |
| ChargePoint Enterprise Cloud Plan (Fleet) *Note: One token per vehicle. Station activation is included in this plan.* | CPCLD-FLEETENT-EXPP-n* |
| ChargePoint Assure® — Prepaid Assure Plan for an Express Plus Single Cable station. | EXPP-PL1000-SC-ASSURE-n* |
| ChargePoint Assure® — Prepaid Assure Plan for an Express Plus Dual Cable station. | EXPP-PL1000-DC-ASSURE-n* |
| ChargePoint Assure® — Prepaid Assure Plan for Express Plus Power Block. | EXPP-BLOCK-ASSURE-n* |
| Commissioning Service (Required per Power Block): includes on-site validation and inspection of electrical, mechanical, installation, wiring and civil parameters for the Express Plus Power Block. | EXPP-BLOCK-COMMISSIONING |

| | |
|---|---|
| Commissioning Service (Required per Power Link): includes on-site validation and inspection of electrical, mechanical, installation, wiring and civil parameters for the Express Plus Power Link. | EXPP-PL1000-COMMISSIONING |

Note: All Express Plus Power Link stations require a cloud plan.

*Substitute *n* for desired years of service (1, 2, 3, 4 or 5 years). Includes parts and labor warranty, remote technical support, on-site repairs when needed, unlimited configuration changes, and reporting.

# Architectural Drawings

## Express Plus Power Link, No Display (Fleet Option Only)

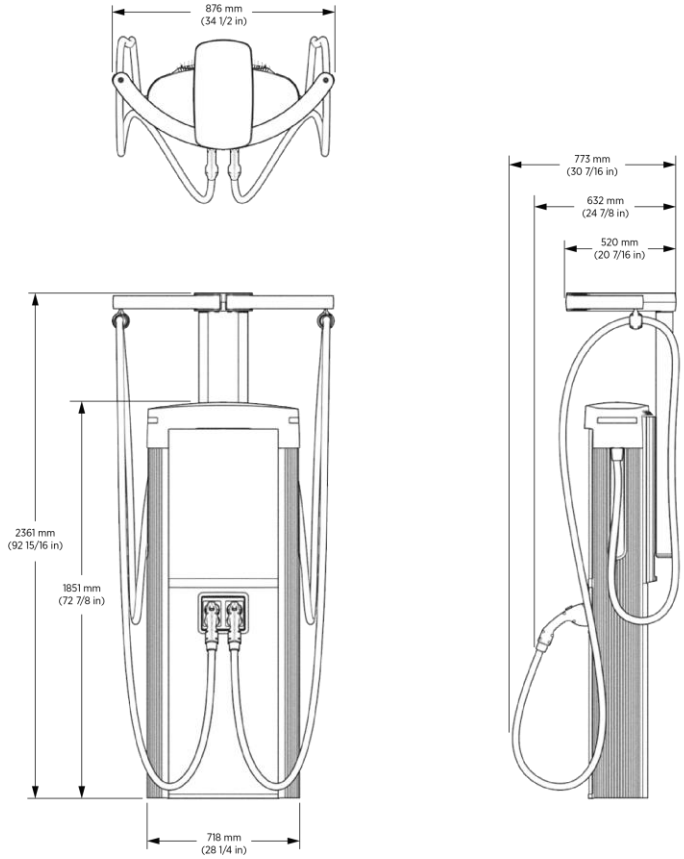

## Express Plus Power Link, No Display, Single Connector (Fleet Option Only)

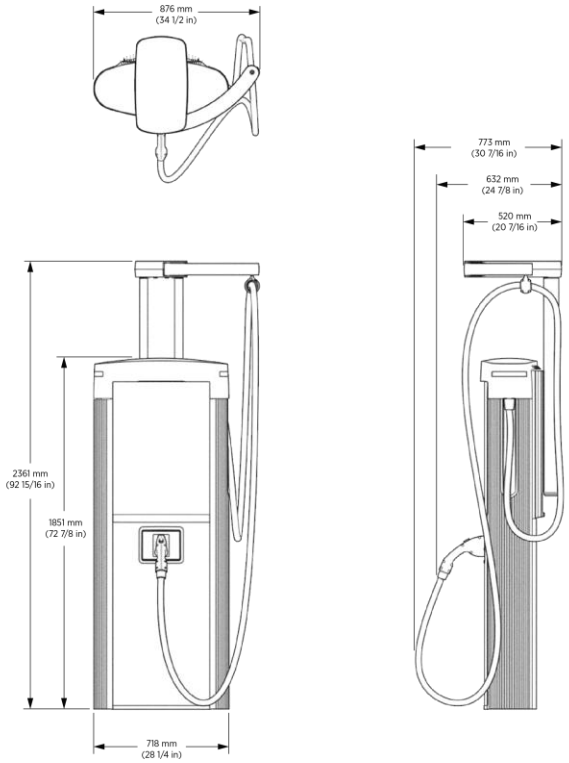


## Express Plus Power Link, Commercial & Fleet Option with Screen

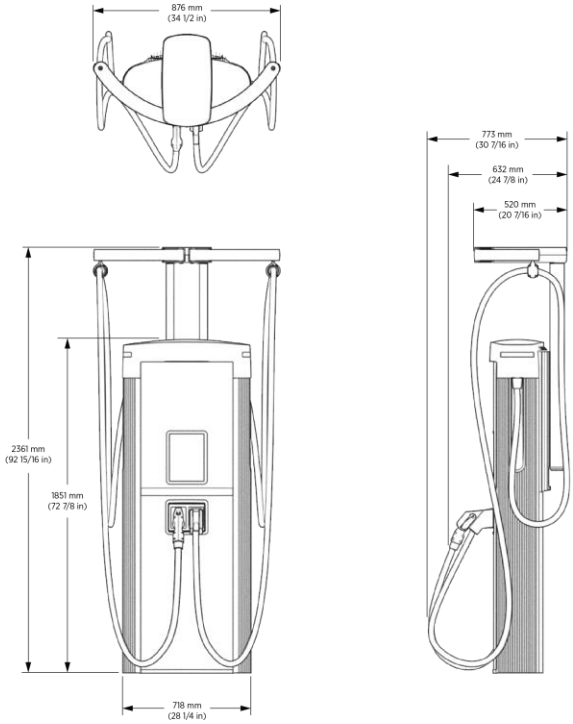


ChargePoint, Inc. reserves the right to alter product offerings and specifications at any time without notice, and is not responsible for typographical or graphical errors that may appear in this document

## Express Plus Power Block

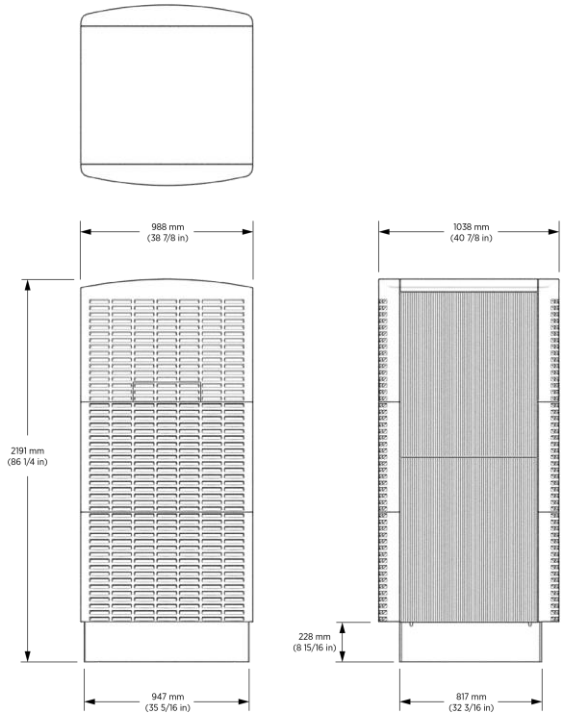


## Express Plus Power Module

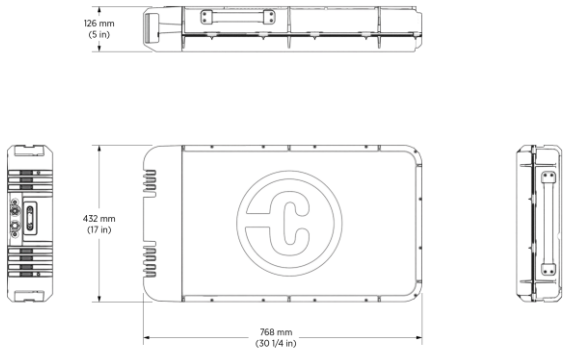

ChargePoint, Inc.
240 East Hacienda Avenue
Campbell, CA 95008-6617 USA

+1.408.841.4500 or
+1.877.370.3802 US and Canada toll-free

chargepoint.com

Contact Us

Visit chargepoint.com

Call +1.408.705.1992

Email sales@chargepoint.com

# INTRODUCING THE FIRST ALL-AMERICAN ELECTRIFIED RUBBER TIRED GANTRY CRANE

## JL JR 1400P

MJ MI-JACK

# AMERICAN MADE
## FOR WORLD TRADE.

*Introducing the Mi-Jack 1400P, designed and built to deliver a better way to handle the need for increased capacity and throughput.*

*The 1400P is the world's most versatile container crane, able to lift and stack containers up to 1 over 6 high, and 8 + 1 wide. It's the American-made electrified RTG crane the industry has been waiting for. Specifically designed and purpose built for port and rail applications, the 1400P has been engineered to surpass any crane in its class.*

*It's the latest addition to the Mi-Jack 1400 family, brought to you by the American family that has been involved in the intermodal industry since its infancy.*

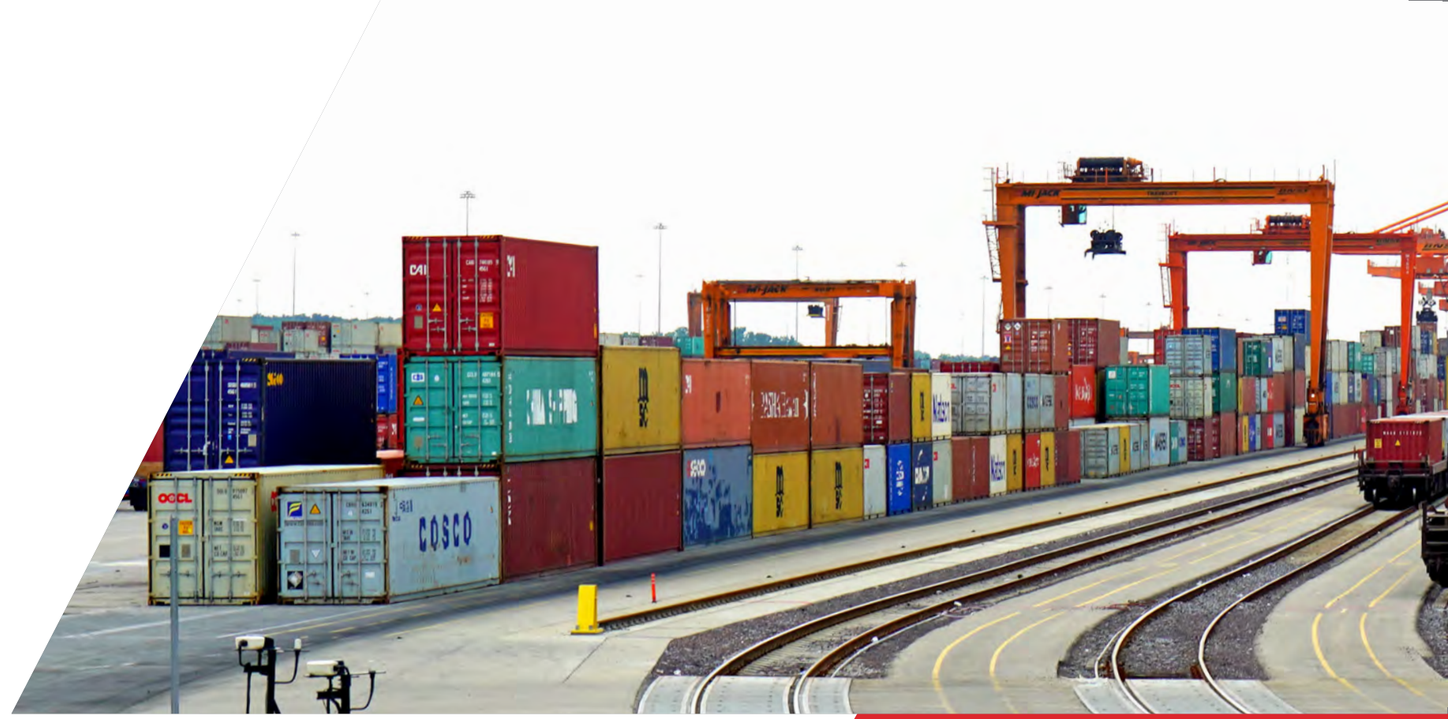


### CUSTOMIZATION

Mi-Jack will custom design and build your crane per your unique specifications with the industry's quickest domestic delivery times:

- *Dimensionally designed for standard or non-standard runway widths and lift heights.*
- *Powered by the exclusive EcoCrane™ Hybrid System, or disel-electric with fuel saver technology.*

### RELIABILITY

Mi-Jack's reputation for reliability is unsurpassed. The 1400P is designed and manufactured for optimal high cycle uptime.

### LONGEVITY

Mi-Jack cranes stand the test of time. They're built to last, minimizing long term annual cost of ownership. Expected service life is multiple decades between disruptive replacement.

### PROXIMITY OF SUPPORT/PARTS/SERVICE

Thanks to its longevity, buying your new 1400P is just the beginning of a long relationship with Mi-Jack, *Where Service is Golden*®. The proximity of Mi-Jack's parts and service assets to domestic container facilities ensures rapid response when you need support fast, minimizing downtime.


# DESIGNED FOR TODAY'S CHALLENGES, BUILT BY INDUSTRY PIONEERS.

***"Mi-Jack is delivering to the world a solution to the new realities of the high throughput port and terminal environment, designed with the versatility to lift and stack any domestic or international container.***

***With factory parts and service close at hand for rapid response, and technical training, it gives our ports and railyards a domestic solution to expediting global trade."***

**Aaron Newton**
*Vice President of Sales, Mi-Jack Products*

## EFFICIENCY.

*The new Mi-Jack 1400P is a game changer, electrified to achieve speeds and cycle times that deliver unsurpassed efficiency and effectiveness.*

## AMERICAN MANUFACTURING.

*The 1400P is built for the industry to minimize downtime and maximize throughput. It's designed, engineered, and built with rugged durability for extra heavy port and rail duty—able to withstand the stress and strain of over 2 million cycles.*

## AUTOMATION-READY.

*These days it takes brains and brawn to be Mi-Jack strong, and the 1400P was born automation-ready to work harder and smarter. It's fully integrated with our Mi-Star Applied Technology platform, the electronic brain of the 21st Century.*

## FLEXIBILITY.

*The 1400P is a versatile machine, designed specifically with your facility in mind. It's a great fit for both port and intermodal use cases, for container stacking or as a high production machine.*

## SAFETY.

*At Mi-Jack, the safety features go in before the name goes on: Our RTGs are designed, engineered, and manufactured to meet or exceed American and worldwide safety standards.*

*Our Mi-Star suite adds an additional layer of safety with technology tools such as GPS guided-steering, equipment tracking, laser-guided lane tracing, and more. Mi-Star eliminates guesswork, reduces fatigue, prevents collisions, and offers optimal visibility — in any container handling environment.*

***Electrify your RTG fleet today — the All-American way!***
*To get started, call **800.664.5525** or email **info@mi-jack.com.***

**MI-STAR AccuFLEET TELEMATICS FULLY INTEGRATED**

▶ *Learn More at*

**MI-JACKTECH.COM**

# DESIGNED TO OUTPERFORM CRANE SPECIFICATIONS

## POWER OPTIONS

MJ EcoCrane Hybrid Systems
- ✓ 70% less Fuel
- ✓ 95% less $NO^2$
- ✓ US EPA Verified

Cable Reel

Cummins Diesel STG V

Bus Bar

## CAPACITY (under spreader)

**45 US Tons**

*(40.8 Metric Tonnes)*

## PERFORMANCE SPECIFICATIONS

| | | |
|---|---|---|
| Hoist Speed (Empty) | 50 m/min | 164 fpm |
| Hoist Speed (Laden) | 30 m/min | 98 fpm |
| Trolley Traverse Speed | 70 m/min | 230 fpm |
| Gantry Speed (Empty) | 130 m/min | 4.9 mph |
| Gantry Speed (Laden) | 70 m/min | 2.6 mph |
| Gantry Speed *(Transverse empty)* | 70 m/min | 2.6 mph |
| Gantry Slope 2% | / | Trolley Slope 2% |

## CONFIGURATIONS

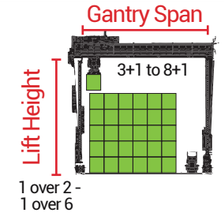


(16) wheel *(standard)*
or
(8) wheel in-line *(optional)*

## DESIGN PARAMETERS

**HOIST** Single hoist drum: internal gearbox , electric motor and disk braking system. (8) point multi-directional mechanical anti-sway reeving with (2) parts of line at each connection point

**SPREADER** 20/40 position settings, Skew (±5.0°), Pitch (±2.5°), Damage prevention system (DPS)
*(Optional: WTP (Wide Twistlock Position), Rotator, Bottom pick)*

***SIMULTANEOUS HOIST, TROLLY, & GANTRY MOVEMENT FOR HIGH PRODUCTIVITY***

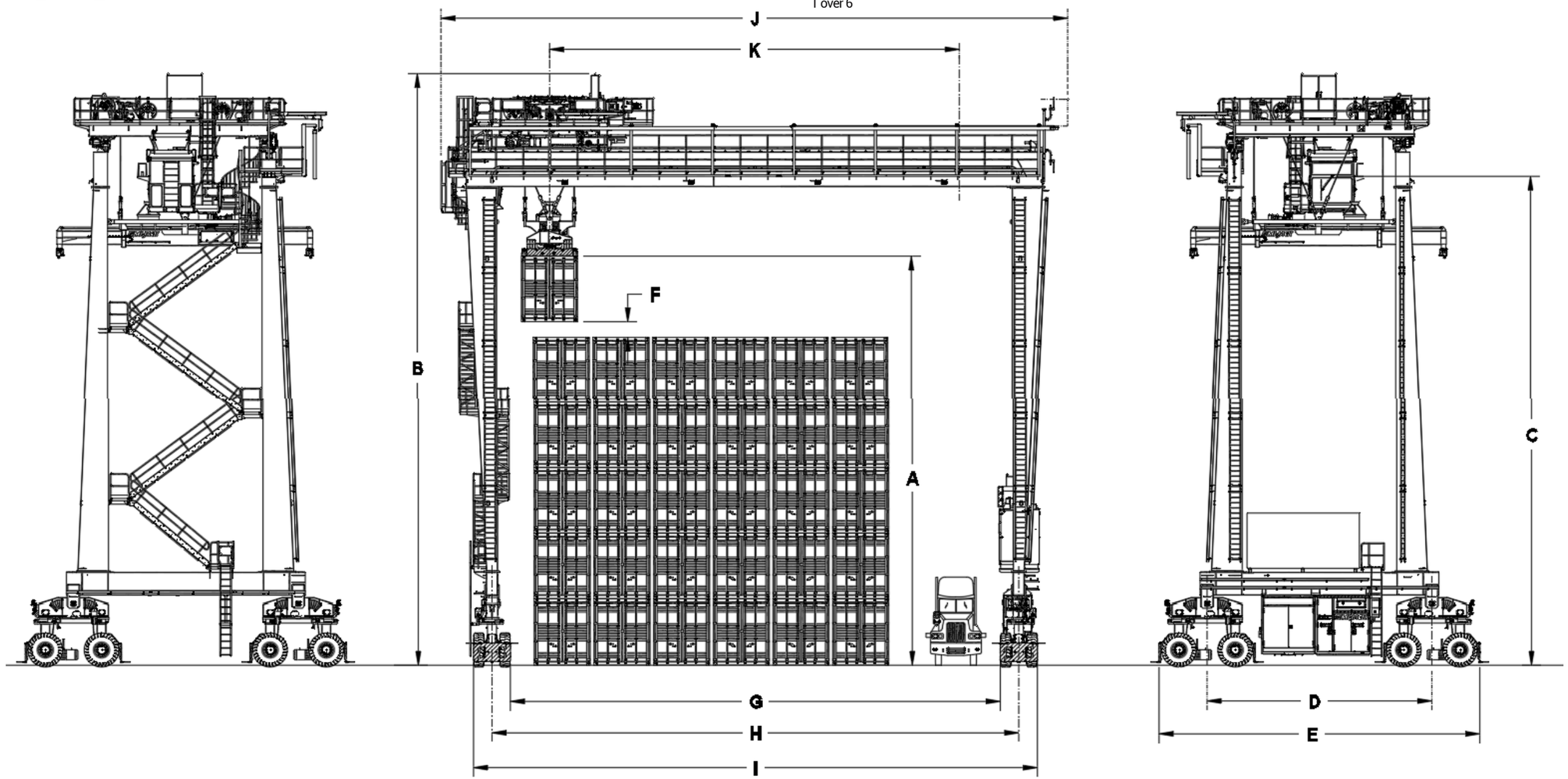


| LIFT HEIGHT | A SPREADER HEIGHT | B OVERALL HEIGHT | C OPERATOR EYE LEVEL | D WHEELBASE | E OVERALL LENGTH | F CONTAINER CLEARANCE |
|---|---|---|---|---|---|---|
| 1 OVER 2 | 31'0" (9.68m) | 57'5" (17.50m) | 42'7" (12.98m) | 32'0" (9.75m) *(same for all)* | 45'8" (13.92m) *(same for all)* | 2'3" (0.69m) *(same for all)* |
| 1 OVER 3 | 40'3" (12.27m) | 66'8" (20.32m) | 51'10" (15.80m) | | | |
| 1 OVER 4 | 49'9" (15.16m) | 76'2" (23.22m) | 61'4" (18.69m) | | | |
| 1 OVER 5 | 59'3" (18.06m) | 85'8" (25.98m) | 70'10" (21.59m) | | | |
| 1 OVER 6 | 68'9" (20.96m) | 95'2" (29.01m) | 80'4" (24.49m) | | | |

| MACHINE SPAN | G INSIDE CLEAR WIDTH | H TREAD WIDTH | I OVERALL WIDTH AT GROUND | J OVERALL WIDTH AT TOP | K TROLLEY TRAVEL |
|---|---|---|---|---|---|
| 3 + 1 | 44'3" (13.49m) | 49'6" (15.09m) | 54'10" (16.71m) | 63'9" (19.43m) | 32'10" (10.01m) |
| 4 + 1 | 52'9" (16.08m) | 58'0" (17.68m) | 63'4" (19.30m) | 72'3" (22.02m) | 41'4" (12.60m) |
| 5 + 1 | 62'9" (19.13m) | 68'0" (20.72m) | 73'4" (22.35m) | 82'3" (25.07m) | 51'4" (15.65m) |
| 6 + 1 | 69'9" (21.26m) | 75'0" (22.86m) | 80'4" (24.49m) | 89'3" (27.20m) | 58'4" (17.78m) |
| 7 + 1 | 81'3" (24.77m) | 86'6" (26.37m) | 91'10" (27.99m) | 100'9" (30.71m) | 69'10" (21.29m) |
| 8 + 1 | 90'9" (27.66m) | 96'0" (29.26m) | 101'4"(30.89m) | 110'3" (33.60m) | 79'4" (24.18m) |

▶ *View all standard and optional equipment at*
**Mi-JACK.COM**

www.mi-jack.com / info@mi-jack.com
(800) 664-5225 / (708) 596-5200

MJ_pbl8oZH_0721

# ZERO EMISSIONS

# WIGGINS YARD eBULL

*Wiggins has been manufacturing forklifts for over 60 years. Engineered for the owner, designed for the operator.*


WIGGINS LIFT CO. INC.

- Zero Emissions
- Motion Alerts – visual and audible
- Radar and Back Up camera
- Unique Battery Management System for extended service life and safety
- Unique battery design keeps battery packs safe
- Vibration and Shock component mounting
- Significantly lower operating and maintenance costs compared to diesel
- Bundling with Charge Stations available – Level II or DC Fast Charge
- SAFE - ANSI/ITSDF B56.1 and UL-583 Conformance

**ALL ENERGY IS FROM UNIQUE HIGH VOLTAGE LITHIUM ION BATTERY PACKS, DESIGNED AND BUILT BY THOR TRUCKS.**

## ZERO EMISSIONS

Wiggins eBull Series is Zero Emission. Stay ahead of the approaching regulations that will eliminate diesel engines in all Off-Highway equipment. With a 10 year equipment replacement cycle, for example, the time to start electrification at your facility is now. Tier IV engines are only a temporary step on the way to Zero Emissions.

## CLEAN AND QUIET POWERTRAIN

All energy is from unique high voltage Lithium Ion battery packs, designed and built by Thor Trucks. Safe High Voltage 720 VDC keeps power delivery strong and efficient while helping to keep weight and costs down. High Torque, direct drive, AC electric motor feeds power to our proven drive axles for high pulling power and gradability. Zero Emissions for clean operations inside buildings and ships, without fumes, soot, or noise.

## SAFETY IS ESSENTIAL

Reverse Backup Camera; Daylight Strobes when moving; optional rear facing radar with audible and visual warnings to operator; optional noise makers include conventional backup alarm and modern White Noise Generator to alert nearby pedestrians. Battery technology is unique with a tested cell configuration that eliminates the potential for cascade failures. Steel protects batteries to prevent damage from falling objects or side collisions. Park Brake automatically applies if there is a loss of hydraulic power. Hydraulic wet disc brakes in the main drive axle are fully capable of stopping the fully loaded machine in the distance required by the ITSDF B56.1 Safety Standard, even without the help normally provided by the electric drive motor.

## PROTECTIONS

Wiring, circuit protections, connectors, and overall design protect the batteries and all electrical components from damage, comply with UL-583 and B56.1 safety standards. Batteries are protected

by steel enclosures, high capacity cooling systems for each pack, vibration and shock isolation mounting. The Battery Management System balances charging and discharging rates, controls temperatures throughout the battery packs, prolongs battery lifetime. The Vehicle Control Unit controls power and temperatures in the liquid cooled electric motors and inverters. Radiator Protection includes expanded metal screen.


## RANGE OF MODELS

Wiggins' first unit is 36,000 lbs at 24 inch load center (16 Tonne at 600 mm). Well over 100 kWh of on-board energy storage support 8 hour shifts, or double shifts with DC Fast Charge opportunity charging. Wiggins offers up to 88,000 lbs at 48 inch load center (40 Tonne at 1200 mm), with over 250 kWh estimated on board storage.

## MINIMAL MAINTENANCE

Change the air filters on the battery cooling system once a year. Wiggins uses 5 year life, non-toxic Polypropylene Coolant, and long life All-Weather hydraulic fluid. Optional Automatic Greasing of is available for mast and steer axle. Since the electrical drive motor does most of the braking, hydraulic axle brakes may last the life of the machine. On-Board Diagnostics assist with maintenance and repairs.

## CONVENIENCE

High Capacity Charge ports are located on both sides of machine for ease of parking when at the charge station. Level 2 A/C charging

with 1 or 2 on-board chargers and CCS1 DC Fast Charging up to 100 kW provide additional charging convenience. Hydraulic system is separate from drive motor, eliminating the need for an inching pedal. A full speed lift can happen while stationary. No transmission means no shifting gears, operator only selects direction of travel. The Brake Pedal communicates with the drive motor and hydraulic brake systems to provide smooth and reliable braking. Display shows power usage and energy remaining.

## SAVES OPERATING DOLLARS

No engine oil or filter changes, no DEF, no diesel fuel spills, no transmission oil or filter changes. Electricity has higher energy efficiency than diesel and costs less per shift to operate. Check with your utility for further cost reductions through programmed Time-Of-Use charging.

## OPPORTUNITIES FOR GRANT SUPPORT

Wiggins has partners with knowledge of government incentives for Zero Emissions programs. Contact us to explore your options in your state, and to perform a site visit. Help us help you feel great about saving money, contributing to cleaner air and water, and staying ahead of regulations. Clean, Quiet, Strong are all well-known features associated with Electric Vehicles.

## FLEXIBILITY FOR THE FUTURE

The latest Battery Chemistry, Fuel Cells, Super Capacitors, Solid State Batteries, Mega-Fast Chargers. These make the news every few weeks, it seems. Wiggins has designed flexibility into the eBull to reduce costs of upgrades and conversions going into the future. Wiggins balances innovation with practicality to achieve the best combination of performance and longevity!

## AND: IT'S A WIGGINS!

Designed and built for long life and strong like a bull. Many Wiggins forklifts delivered in the last 60 years are still working for their owners or are commanding high resale value. We know, because we provide parts and repair support for units that started service decades ago. Join our customer family with confidence of a fair and comprehensive warranty coupled with on-going support.


DEALER INFORMATION:

XL Lifts

info@xlliftsinc.com
www.XLLiftsinc.com
Sales: 805.889.8487
General inquiries: 805.765.6099

# ZERO EMISSIONS

# WIGGINS YARD eBULL

*Wiggins has been manufacturing forklifts for over 60 years. Engineered for the owner, designed for the operator.*


WIGGINS LIFT CO. INC.

- Zero Emissions
- Motion Alerts – visual and audible
- Radar and Back Up camera
- Unique Battery Management System for extended service life and safety
- Unique battery design keeps battery packs safe
- Vibration and Shock component mounting
- Significantly lower operating and maintenance costs compared to diesel
- Bundling with Charge Stations available – Level II or DC Fast Charge
- SAFE - ANSI/ITSDF B56.1 and UL-583 Conformance

**ALL ENERGY IS FROM UNIQUE HIGH VOLTAGE LITHIUM ION BATTERY PACKS, DESIGNED AND BUILT BY THOR TRUCKS.**

## ZERO EMISSIONS

Wiggins eBull Series is Zero Emission. Stay ahead of the approaching regulations that will eliminate diesel engines in all Off-Highway equipment. With a 10 year equipment replacement cycle, for example, the time to start electrification at your facility is now. Tier IV engines are only a temporary step on the way to Zero Emissions.

## CLEAN AND QUIET POWERTRAIN

All energy is from unique high voltage Lithium Ion battery packs, designed and built by Thor Trucks. Safe High Voltage 720 VDC keeps power delivery strong and efficient while helping to keep weight and costs down. High Torque, direct drive, AC electric motor feeds power to our proven drive axles for high pulling power and gradability. Zero Emissions for clean operations inside buildings and ships, without fumes, soot, or noise.

## SAFETY IS ESSENTIAL

Reverse Backup Camera; Daylight Strobes when moving; optional rear facing radar with audible and visual warnings to operator; optional noise makers include conventional backup alarm and modern White Noise Generator to alert nearby pedestrians. Battery technology is unique with a tested cell configuration that eliminates the potential for cascade failures. Steel protects batteries to prevent damage from falling objects or side collisions. Park Brake automatically applies if there is a loss of hydraulic power. Hydraulic wet disc brakes in the main drive axle are fully capable of stopping the fully loaded machine in the distance required by the ITSDF B56.1 Safety Standard, even without the help normally provided by the electric drive motor.

- Reverse Backup Camera
- Daylight Strobes when moving
- Optional rear facing radar with audible and visual warnings to operator
- Optional noise makers include conventional backup alarm and modern White Noise Generator to alert nearby pedestrians.



## PROTECTIONS

Wiring, circuit protections, connectors, and overall design protect the batteries and all electrical components from damage. Certifications of compliance with UL-583 and ITSDF B56.1 safety standards are expected early 2019. Batteries are protected by steel enclosures, high capacity cooling systems for each pack, vibration and shock isolation mounting. The Battery Management System balances charging and discharging rates, controls temperatures throughout the battery packs, prolongs battery lifetime. The Vehicle Control Unit controls power and temperatures in the liquid cooled electric motors and inverters. Radiator Protection includes expanded metal screen.

## RANGE OF MODELS

Wiggins' first unit is 36,000 lbs at 24 inch load center (16 Tonne at 600 mm). Well over 100 kWh of on-board energy storage support 8 hour shifts, or double shifts with DC Fast Charge opportunity charging. Wiggins offers up to 88,000 lbs at 48 inch load center (40 Tonne at 1200 mm).

## CONVENIENCE

High Capacity Charge ports are located on both sides of machine for ease of parking when at the charge station. Level 2 A/C charging with 1 or 2 on-board chargers and CCS1 DC Fast Charging up to 100 kW provide additional charging convenience. Hydraulic system is separate from drive motor, eliminating the need for an inching pedal. A full speed lift can happen while stationary. No transmission means no shifting gears, operator only selects direction of travel. The Brake Pedal communicates with the drive motor and hydraulic brake systems to provide smooth and reliable braking. Display shows power usage and energy remaining.


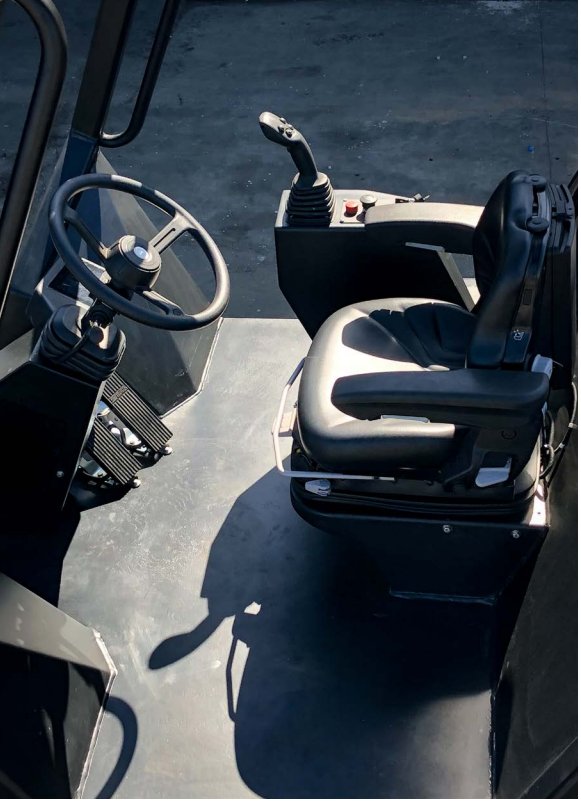

## MINIMAL MAINTENANCE

Change the air filters on the battery cooling system once a year. Wiggins uses 5 year life, non-toxic Polypropylene Coolant, and long life All-Weather hydraulic fluid. Optional Automatic Greasing is available for mast and steer axle. Since the electrical drive motor does most of the braking, hydraulic axle brakes last far longer. On-Board Diagnostics assist with maintenance and repairs.

## SAVES OPERATING DOLLARS

No engine oil or filter changes, no DEF, no diesel fuel spills, no transmission oil or filter changes. Electricity has higher energy efficiency than diesel and costs less per shift to operate. Check with your utility for further cost reductions through programmed Time-Of-Use charging.

## OPPORTUNITIES FOR GRANT SUPPORT

Wiggins has partners with knowledge of government incentives for Zero Emissions programs. Contact us to explore your options in your state, and to perform a site visit. Help us help you feel great about saving money, contributing to cleaner air and water, and staying ahead of regulations. Clean, Quiet, Strong are all well-known features associated with Electric Vehicles.

## FLEXIBILITY FOR THE FUTURE

The latest Battery Chemistry, Fuel Cells, Super Capacitors, Solid State Batteries, Mega-Fast Chargers. These make the news every few weeks, it seems. Wiggins has designed flexibility into the eBull to reduce costs of upgrades and conversions going into the future. Wiggins balances innovation with practicality to achieve the best combination of performance and longevity!

WIGGINS YARD eBULL ELECTRIC

## AND: IT'S A WIGGINS!

Designed and built for long life and strong like a bull. Many Wiggins forklifts delivered in the last 60 years are still working for their owners or are commanding high resale value. We know, because we provide parts and repair support for units that started service decades ago. Join our customer family with confidence of a fair and comprehensive warranty coupled with on-going support.


**WIGGINS LIFT COMPANY**

*www.wigginslift.com*
*info@wigginslift.com*

*2571 Cortez Street*
*Oxnard, CA 93036*

# XLC-975

Rated Capacity At 97-in. (2,464 mm) Center of Load
90,000-lbs. (40,824 kg) / 2-high Stacking
80,000-lbs. (36,288 kg) / 5-high Stacking

Rated Capacity At 106-in. (2,692 mm) Center of Load
82,000-lbs. (37,195 kg) / 2-high Stacking
75,000-lbs. (34,020 kg) / 5-high Stacking
236-in. (5,994 mm) Wheelbase


Cover image is for example purposes only and may not reflect current features.

**FAITH • VISION • WORK**

**www.taylorbigred.com**

## Standard Features: XLC-975

- 42’ ULTRA-VIEW Telescopic Mast for stacking 5-High (9’ 6” Loaded)
- 20-40 ISO Container Handling Attachment, Chain Suspended, with reach, slew, side shift, guide arms and mechanical pile slope
- Accumulator in Lift Circuit
- Volvo 12.8L TAD1371VE 388-HP Tier 4-Final Diesel (Turbocharged)
- Donaldson dry-type air cleaner w/safety element & restriction indicator (vertical air intake extension with TaylorMax Precleaner)
- Dana TE-30 5-speed powershift transmission
- Powertrain protection system for engine and transmission
- Kessler D-102W HD planetary drive axle with wet disc brakes
- Taylor 600 welded steel steer axle with stud protectors (single hydraulic cylinder design with heavy-duty links from the cylinder ram directly to tapered roller bearing mounted spindles)
- 18.00 X 25 – 40PR bias pneumatic drive and steer tires

## Chassis

- All-welded steel frame with 4 Lifting Eyes (lifting eyes not designed for level pick)
- Bolted counterweight
- Replaceable bolt-on steps and handrails
- Lockable Fuel Cap
- Dual side engine bay doors (both sides of machine), and removable deck plates open to expose drive train for ease of maintenance.

## Cab

- Enclosed, elevated operator, 2-door all-welded steel center mount DREAM cab (includes dome light, wide angle mirrors, door hold back latches with trip handles, handrails, black floor mats and is isolation mounted for noise and vibration reduction)10-degree cab tilt (can be turned off to suit operator preference)
- 32,000 BTU heater and defrost
- Tinted glass with front and rear windshield wipers and washers
- Fully adjustable air ride swivel seat with integrated directional control
- Multifunction joystick mounted on adjustable arm rest
- Directional control (column mounted)
- Operator Restraint System (Orange, anti-cinch seat belt with starting sequence neutral lock)
- Operator Presence System with timed idle and neutral shutdown (5 minute default, password adjustable from 1-120 minutes by end user)
- Taylor Integrated Control System (TICS) …see next page for additional info
- TaylorTrak Pro - Advanced Fleet Telematics hardware
- 7-in touch screen color display
- The one-piece flip-down instrument panel is pre-wired to accommodate heavy-duty
- accessories.
- All wiring is color and number coded.
- Dual USB charging ports
- Hydrostatic, steer-on-demand power steering with tilt steering column

## Electrical

- 24-volt electrical system with 110 amp alternator
- Dual heavy-duty batteries
- Battery disconnect/lock-out switch
- 2 Sets of Amber/Green/Red Twistlock operation signal lights (mounted in cab and on container attachment)
- (4) forward facing LED work lights (cab mounted)
- (2) rear facing LED work lights (cad mounted)
- (2) LED work lights (mast mounted)
- (2) LED work lights (twistlock mounted)
- (2) LED step lights
- Circuit breakers with heavy duty connectors (no automotive type fuses)
- Breaker reset switches
- Key-type anti-restart ignition switch
- Air Horn with 2-gal air tank (126 dBA)
- Keyswitch-actuated amber strobe light
- Forward and reverse-actuated warning alarms

## Vehicle Information Package

- Operators Guide
- Maintenance and Service documentation including key circuit drawings (Serial Number Specific Parts Book is available upon request)
- Safety Check Manual and Video

Fully Enclosed 2-door Cab - All Steel - 32,000 BTU Heater (Standard)

12 LED Work /Step Lights (Standard)

Fully Adjustable Air Ride Seat (Standard)

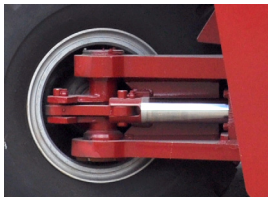

Industry’s Toughest Steer Axle (Standard)


Vehicle Information Package (Standard)

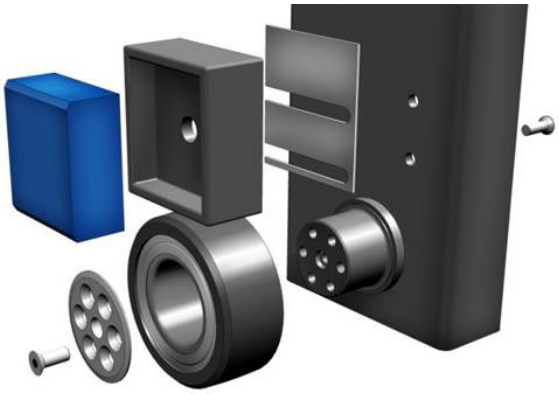

The mast and carriage main rollers are common and use tapered roller bearings. The side thrust pads, made from cast nylon, are adjustable to compensate for wear.

## NEED OPTIONS?

**Just ask one of our Taylor Specialist.**

Taylor Machine Works was founded on the promise of meeting our customer’s needs. The signage on our original facility in 1927 stated “We Engineer and Build What You Need” and those ideals still ring true today! From multiple Mast, Carriage and Fork configurations to Special Attachments that are unique to your business, we will step forward to meet the challenge. We have a dedicated engineering group focused on meeting special request from our customers. This ensures that you have the exact equipment you need to tackle your rugged applications. With hundreds of options readily available for our trucks, and the ability to custom engineer any other need that arises, Taylor Machine Works is here ready to serve.

## Serviceability

Taylor Container Handlers are designed with ease of maintenance and serviceability as a key priority. With today's engine and emissions requirements, daily maintenance checks and timely periodic service are the key to your equipment's longevity. All daily checks across the Taylor product line can be accessed from either the ground or running board, ensuring that operators can complete these requirements with ease. Also, the side service doors and removable deck panels open to expose the drivetrain and hydraulics to provide easy access for service and inspection.

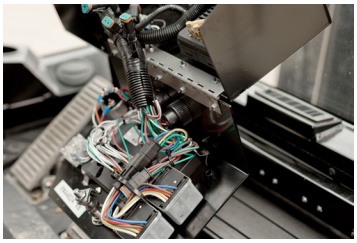

Flip-down Dash with Color/Number Coded Wiring (Standard)

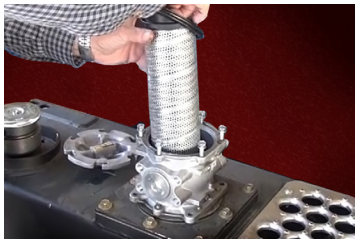

Spin-on Breamer, Wire Mesh Strainer & Replaceable Internal Element (Standard)

Easy Access to Drive Train & Hydraulics

Easy Access for Steer Axle Maintenance

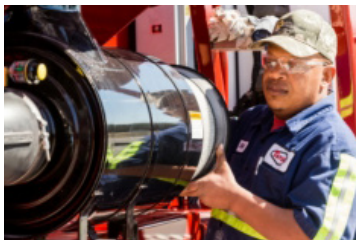

Donaldson Air Cleaner with Safety Element (Standard)

Lightweight Deck Lids and Easy Access to Heavy Duty Circuit Breaker Panel

Service & Inspections from Running Board Dual Engine Bay Doors provide full access

Easily Accessible Daily Checks

## Hydraulics & Brakes

Taylor Lift Trucks feature hydraulic systems that utilize gear type pumps and sectional control valves. Joystick control that can be tuned for operator comfort is standard on all of our models. Power-on-Demand is also featured on every Taylor lift truck, but can be turned off to suit operator preferences. The Hydraulic tank features a spin-on breather, wiremesh strainers, full-flow 10-micron return-line filters and a replaceable internal element. The hydraulic oil and wet disc brakes are cooled by an air-to-oil cooler separate from the transmission cooler. Taylor strives to keep things simple and use appropriate technology that brings value to our customers.

## Taylor Integrated Control System (TICS)

The TICS system is a vehicle electronic control system comprised of multiple components including an operator display module, which provides integrated control of the electronic and hydraulic systems on the truck. J1939 CANbus technology allows all machine data to be accessed through the 7-in. touch screen color display (located in the cab) and allows controllers and sensors to communicate with minimal wiring between the components. This display indicates engine, transmission, hydraulic and emissions info as well as active warnings, fuel consumption, maintenance data and man/machine interface data. The display also allows service personnel to access data needed during troubleshooting (such as sensor status and controller outputs). Machine functions can be tuned through this display and are password protected to prevent operator access.

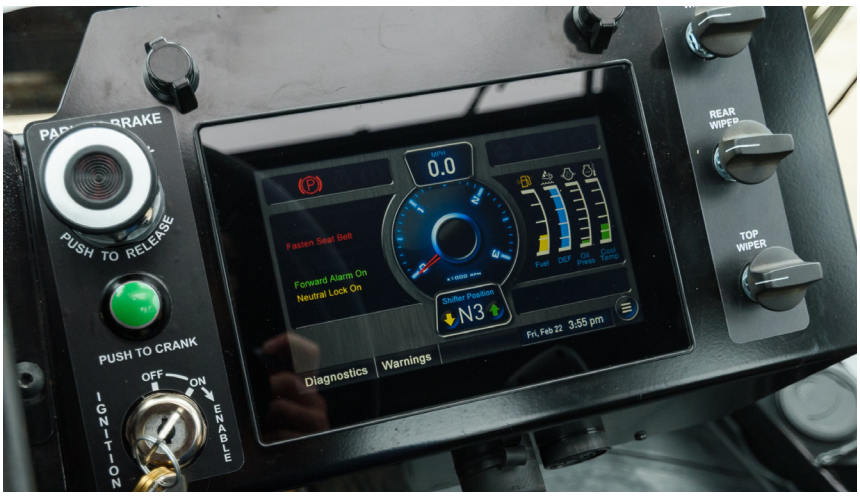


- TICS gives customers the ability to customize operation parameters of their Taylor lift truck, perform diagnostics, and monitor key functions including fuel consumption.
- The TICS interface is simple, easy to understand and user friendly.
- The TICS diagnostic ability is key to quick repair and less downtime.
- Troubleshooting and diagnosing most problems can be done by the customer's own mechanic, without the need for a service tech with a detached computer.
- There are multiple options available including, but not limited to, scale systems, modem based fleet tracking and the Vision Plus™ pedestrian detection system.

Supporting Taylor Lift-trucks Worldwide

# Sudden Service, Inc.

## 24/7 Worldwide Support

### Taking Care of Our Customers is Priority One!

Unbeatable customer service, backed by over 90 years of customer satisfaction.

## Your #1 Source for Genuine Taylor Parts

Our customers deserve to know they can always depend on us for service and support 24/7. Because of that expectation, we have factory trained service techs on the ground nationwide. Over 200 service technicians receive continuing education (hands-on) at the factory each year. Your service techs are supported by the best OEM parts and distribution facility in the world. With $60,000,000 dollars worth of parts distributed across our factory stores and millions more on the shelves at our dealers. We pride ourselves on providing you with unmatched Service & Support by a Worldwide Team of dedicated specialists.

## Have You Considered Leasing?

## Or Custom Fleet Management?

Our goal is to structure a financial product that improves your profit with reduced operating cost by increasing up-time and offering a wide range of financial solutions to fit the specific needs of your business. Taylor Leasing offers over 100 different financial structures within the main product categories of:

- **Operating Lease** - A financial choice which provides use of equipment for extended period of time with a low monthly operating cost.
- **Finance Lease** - This type of lease offers flexibility in payments with equipment ownership options at the end of the lease term.
- **Fleet Management** - Your needs and goals are always evaluated carefully before providing you with a custom fleet leasing solution. We only include fleet management services (including maintenance solutions detailed below) that help your fleet function more efficiently.
- **Fleet Maintenance** - We offer tailored fleet maintenance solutions, that range from periodic service and emergency repairs to full on site personnel. Taylor Fleet Maintenance Programs assist in budgeting, while helping to eliminate unpredictable expenses and allowing you to focus on your actual business.

For more information Phone: (662) 773-3421 Ext. 400 - Fax: (662) 773-9146 or E-mail Stephen Arnett sarnett@taylorbigred.com

**www.taylorleasingandrental.com**

Preliminary 6/25/20

***Power Packs – 30 plug Dual Engine:***

- Engine Type – Tier 3 with 400 Hp CAT/Perkins.
- Fuel consumption – 11 gal per hour with tank capacity of 4,000 gal.
- KW Output– Generator 300 – 350 KW's.
- Fuel Type: Off-Road Diesel.

***Power Pack – Land Base 30 plug Single Engine:***

- Engine Type – Tier 3 with 400 Hp CAT
- Fuel Consumption – 9 gals pr hour with 275-gal tank.
- KW Output – 210 KW's.
- Fuel Type – Off-Road Diesel.

***Nose Mount /Under Slung Gensets:***

- Engine Type- Tier 3 with 32-34 Hp Kubota(Carrier) or Yanmar(TK).
  Fuel consumption – 1.0 gallon an hour. N/M 120 gals and U/S 50 to 75 gals.
- KW Output: 460V
- Fuel Type – Off Road Diesel.

***8 to 10K Forklifts:***

- Engine Type – Tier 3 with 84 Hp Toyota.
- Fuel consumption - .75 gals an hour with a 15-gal tank.
- Fuel Type – Off-Road Diesel.

***Yard Brute/Hostler:***

- Engine Type - Tier 3 with 175 – 210 Hp Cummins.
- Fuel consumption – 2.0 gallons an hour with 50-gal tank.
- Fuel Type – Off-Road Diesel.

PRODUCT LEAFLET

# Electric Vehicle Infrastructure

## Terra 94/124/184 UL DC Fast Charging Station

ABB's Terra all-in-one DC fast chargers offer power up to 180 kW, with convenient charging times for every EV – including those with HV batteries.

The compact, modular design makes it perfect for retail, highway or fleet use, with power sharing to further optimize utilization. All Terra chargers feature connectivity for remote services and OCPP enablement.

—
The Terra 94/124/184 is available with CCS-only, CCS-dual and CCS+CHAdeMO dual outlets. Cable management options enhance reliability and usability.

**Flexible configuration**
ABB's Terra DC Fast chargers from 50 kW to 180 kW are designed for the most compact, reliable and future-proof demands. In addition to a range of power selections, Terra chargers can be configured with CCS and CHAdeMO connector cables, in single or dual outlet format. Cable management, payment enablement and connectivity choices also offer owners, operators and site hosts options tailored to the needs of every charging site, from public to fleet needs.

**The most reliable, scalable choice**
ABB's Terra chargers offer redundant power architecture for the highest uptime in the EV infrastructure industry. Additionally, Terra chargers can meet the needs of high voltage BEVs up to 920V, making these systems fully compatible with all current and future EVs. With a host of configuration options, and upgradability, Terra DC fast chargers will follow EV market growth over time.

**Power sharing for high utilization**
Enabling every business model is critical for EV charging infrastructure. With this goal in mind, ABB has designed the Terra 124 and Terra 184 models with power sharing technology which capable of charging two vehicles at the same time. Simultaneous charging can deliver higher utilization for every charging asset, a major key to public and fleet electrification success.

—
ABB Terra "all in one" chargers are offered from 50 kW to 180 kW. The Terra 94 and Terra 124 can be upgraded to 180 kW over time.

Note: upgrading charging systems may require a grid connection upgrade as well as field certification.

**Terra 54**
one EV
up to
**50 kW**

**Terra 94**
one EV
up to
**90 kW**

upgradable

**Terra 124**
one EV
up to
**120 kW**

**Terra 124**
two EVs
each up to
**60 kW**

upgradable

**Terra 184**
one EV
up to
**180 kW**

**Terra 184**
two EVs
each up to
**90 kW**

**Key features**

- A compact, all-in-one charger from 90 kw to 180 kW
- Terra 124 and Terra 184 can fast-charge two vehicles at the same time
- Paralleled power module topology with automatic failover offers high uptime through redundancy
- Delivers full output power continuously and reliably over its lifetime
- Flexible configurations include CCS-single, CCS-dual and CCS+CHAdeMO-dual outlets
- Up to 920 VDC for every passenger or fleet EV
- Bright, daylight readable touchscreen display with graphic visualization of charging session
- High short circuit current rating
- EMC Class B certified for safe use at fuel stations, retail centers, offices, and residential-adjacent sites
- Design enables ADA compliant installations
- RFID authorization modes
- Always connected, enabling remote services, updates and upgrades
- Robust all-weather powder-coated stainless steel enclosure
- Quick and easy installation as well as serviceability

**Optional features**

- Reliable cable management system available as ordered or field upgrade
- Customizable user interface
- Integrated payment terminal
- Web tools for statistics and PIN access management
- Integration with OCPP networks, payment platforms and energy management
- Autocharge and ISO 15118 enabled

**Why charging operators and fleets prefer ABB**

- ABB offers the most advanced, safe and reliable EV infrastructure and grid connected technologies
- ABB Connected Services enable every business and remote services model
- ABB's decade of EV charging experience and close cooperation with EV OEMs, networks and fleets

| Specifications | Terra 94 | Terra 124 | Terra 184 |
|---|---|---|---|
| **Electrical** | | | |
| Output power* | 90 kW continuous | 120 kW or 60 kW x 2 continuous | 180 kW or 90 kW x 2 continuous |
| AC Input voltage | 480Y / 277 VAC +/- 10 % (60 Hz) | | |
| AC input connection | 3-phase: : L1, L2, L3, GND (no neutral) | | |
| Nominal input current and input power rating | 115 A, 96 kVA | 153 A, 128 kVA | 230 A, 192 kVA |
| Recommended upstream circuit breaker(s) | 150 A | 200 A | 300 A |
| Power Factor* | > 0.96 | | |
| Current THD* | < 5% | | |
| Short circuit current rating | 65 kA | | |
| DC output voltage | CCS-1: 150 - 920 VDC; CHAdeMO: 150 - 500 VDC | | |
| DC output current | CCS-1: 200 A; CHAdeMO: 200 A (125 A optional) | | |
| Efficiency* | 95% | | |
| **Interface and Control** | | | |
| Charging protocols | CCS1, CCS2 and CHAdeMO 1.2 | | |
| User interface | 7" high brightness full color touchscreen display | | |
| RFID system | ISO/IEC 14443A/B, ISO/IEC 15393, FeliCa™ 1, NFC reader mode, Mifare, Calypso, (option: Legic) | | |
| Network connection | GSM/3G/4G modem; 10/100 Base-T Ethernet | | |
| Communication | OCPP 1.6 Core and Smart Charging Profiles; Autocharge | | |
| Supported languages | English (others available on request) | | |
| **Environment** | | | |
| Operating temperature | -35 °C to +55 °C / -31 °F to +131 °F (de-rating characteristics apply at extreme temperatures) | | |
| Recommended storage | -10 °C to +70 °C / 14 °F to +158 °C (dry environment) | | |
| Protection | IP54, NEMA 3R; indoor and outdoor rated | | |
| Humidity | 5% to 95%, non-condensing | | |
| Altitude | 2000 m (6560 ft) | | |
| **General** | | | |
| Charge cable | 6 m (20 ft) standard; 8 m (26 ft) optional | | |
| Dimensions (H x W x D) | 1900 x 565 x 880 mm; 74.8 x 22.2 x 34.6 in | | |
| Weight | 350 kg / 775 lbs | 365 kg / 800 lbs | 395 kg / 870 lbs |
| Compliance and safety | UL 2202, CSA No. 107.1-16; UL 2231-1, UL 2231-2, CSA STD C22.2 No. 107.1; NEC Article 625, EN 61851, EN 62196; CHAdeMO 1.2; DIN 70121, ISO 15118; IEC 61000-6-3; EMC Class B, FCC Part 15 | | |

*Data shown at nominal output power

**ABB Inc.**
950 W Elliott Rd. Suite 101
Tempe, AZ, 85284
United States
Phone: 800-435-7365
E-mail: US-evci@us.abb.com

**ABB Inc.**
800 Hymus Boulevard
Saint-Laurent, QC H4S 0B5
Canada
Phone: 800-435-7365
E-mail: CA-evci@abb.com

**abb.com/evcharging**



9AKK107991A4247

# Terra 94/124/184 UL Product guide

Terra fast chargers: The most deployed DC fast chargers in the world.

- Power sharing for high utilization
- Future proof, high-voltage technology
- Reliable, compact and flexible design
- Always connected, always smart

**At ABB we have more than 135 years of heritage in electrification technology leadership and a world-class EV charging portfolio for safe, smart and sustainable mobility – from the vehicle to grid.**

**17,000+**
connected fast chargers installed worldwide

in operation across
**80+**
countries

R&D and interoperability tested with
**50+ OEMs**

**10+ years**
of EV charging field experience

**24/7/365**
connectivity with remote services

# Terra 94/124/184 DC Fast Charger
## At a glance

**CONNECTED** by cellular modem for 24/7 remote services, receiving updates over-the-air to support every new EV on the road - plus easy remote OCPP integration.

**COMPACT, UPGRADABLE** power modules to support increasing demand from more EVs with bigger batteries - in a very easy to service package.

**LCD** touchscreen with high brightness and graphical visualization of the charging process

**ROBUST** all-weather powder-coated stainless steel enclosure

**SAFETY:** Emergency stop push button to immediately stop charging operation

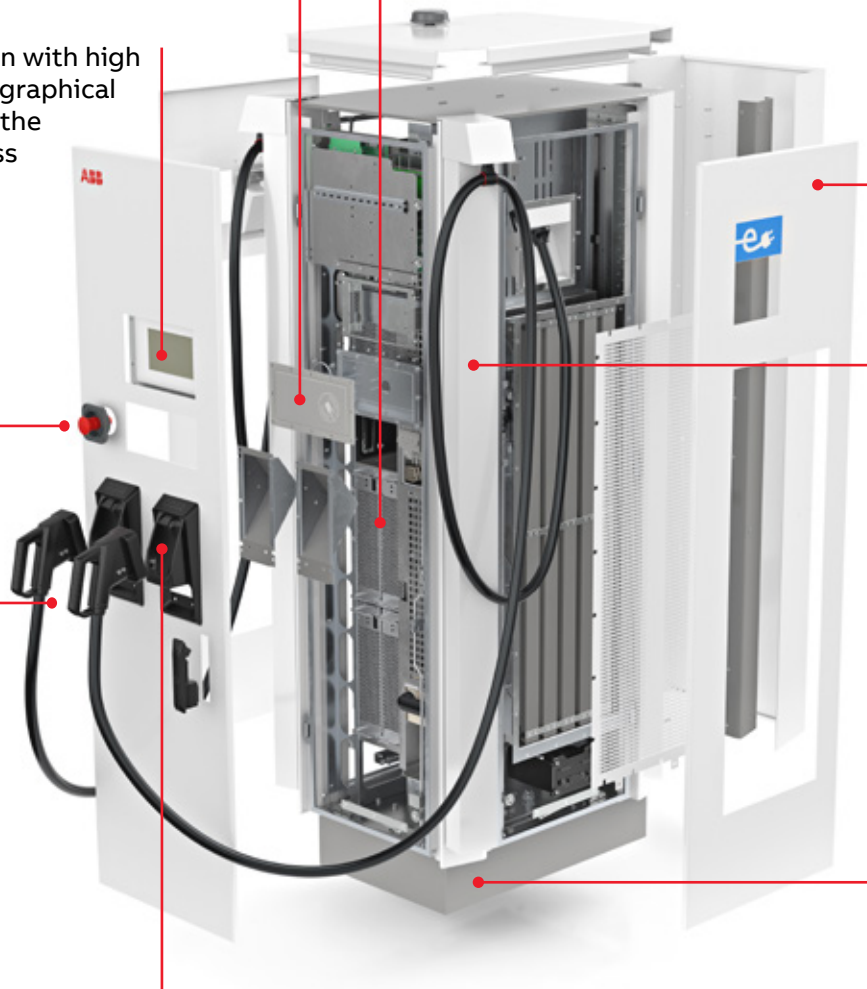

**CONVENIENCE** and hassle-free reach for users – with retractable cable management option

**GREATER** revenue potential with simultaneous charging for 2 electric vehicles, including CCS and CHAdeMO combinations

**EASY** installation design with fast remote commissioning and start-up

**AUTOMATIC** authentication capability via CCS connector in the vehicle thanks to easy OCPP integration and Autocharge functionality

**MAX CHARGING POWER**
Terra 94: 90 kW
Terra 124: 120 kW (and 2 x 60 kW)
Terra 184: 180 kW (and 2 x 90 kW)

**MAX CHARGING VOLTAGE**
CCS 920 VDC
CHAdeMO 500 VDC

**DIMENSIONS**
Height 1900 mm / 74.8 in
Width 5655 mm / 222.6 in
Depth 880 mm / 34.6 in
Weight 395 kg / 871 lbs

# Why Terra 94/124/184?
## Advanced, flexible, compact and smart

### Power sharing for high utilization

- Terra 124 and Terra 184 can charge two vehicles simultaneously
- High utilization of charging assets benefit both public and fleet business models
- Supports all open charging standards in flexible configurations
- Safety certified to the highest standards

### Future-proof, flexible high-voltage technology

- Flexible, redundant power architecture supports high uptime
- High-voltage charging range up to 920 V
- Fully compatible with current and future EVs
- Option to upgrade power over time, from 90 kW up to 180 kW, to follow EV market growth

### Reliable, compact and flexible design

- Based on the Terra platform, the most widely deployed DCFC family in the world
- Space-saving, all-in-one footprint with very easy installation and servicing
- Robust construction for all operational environments
- Cable management options enhance longevity

### Always connected, always smart

- 24/7 connectivity, 99.5% ABB network uptime
- Remote services with remote firmware updates and upgrades
- OCPP integration-ready as well as ABB Web Tools functionality
- Autocharge and ISO 15118-ready for plug and charge operation

# Fast charging beyond 50 kW

## Power sharing delivers high utilization

**90kW Charging Points**
Terra chargers can provide a quick refill adding 100 miles of range in as little as 15 minutes (Terra 94) or 30 minutes (Terra 54).*

**Retail/Shopping Sites**
The Terra 124 charger can provide a full battery charge to two vehicles simultaneously while drivers are shopping, dining or at the movies.

**Highway corridors and Fleets**
The Terra 184 chargers can add 100 miles of range in as little as 10 minutes as well as fast-charge two vehicles at the same time in less than 20 minutes.*

one EV
up to
**90 kW**

one EV
up to
**120 kW**

two EVs
each up to
**60 kW**

one EV
up to
**180 kW**

two EVs
each up to
**90 kW**

* actual charging speed depends on the electric vehicle model(s) and charging conditions



Simultaneous charging with high power fast chargers can deliver maximum charging asset utilization while serving an ever-growing population of large battery electric vehicles.

# High voltage charging explained
## A future-proof strategy

**High voltage charging capabilities**
As electric vehicles and their use cases diversify, high voltage DC charging has become more important to increase charging power while ensuring as much efficiency, safety and usability in DC charging systems.

Traditional passenger vehicle battery packs are usually designed for 400 VDC charging, so many standard charging systems do not exceed 500 VDC capability. However, some newer vehicles may have battery packs that exceed 400 VDC, often in the 600 to 800 VDC range.

Some EV battery packs, such as with vehicles designed for fleet usage, may only charge at high voltage ratings, demanding charging infrastructure that can deliver power tailored to HV battery packs.

ABB's Terra 94, Terra 124 and Terra 184 chargers are designed to meet EV battery voltage capabilities up to 920V to deliver charging services across a wider range of today's and tomorrow's EVs.

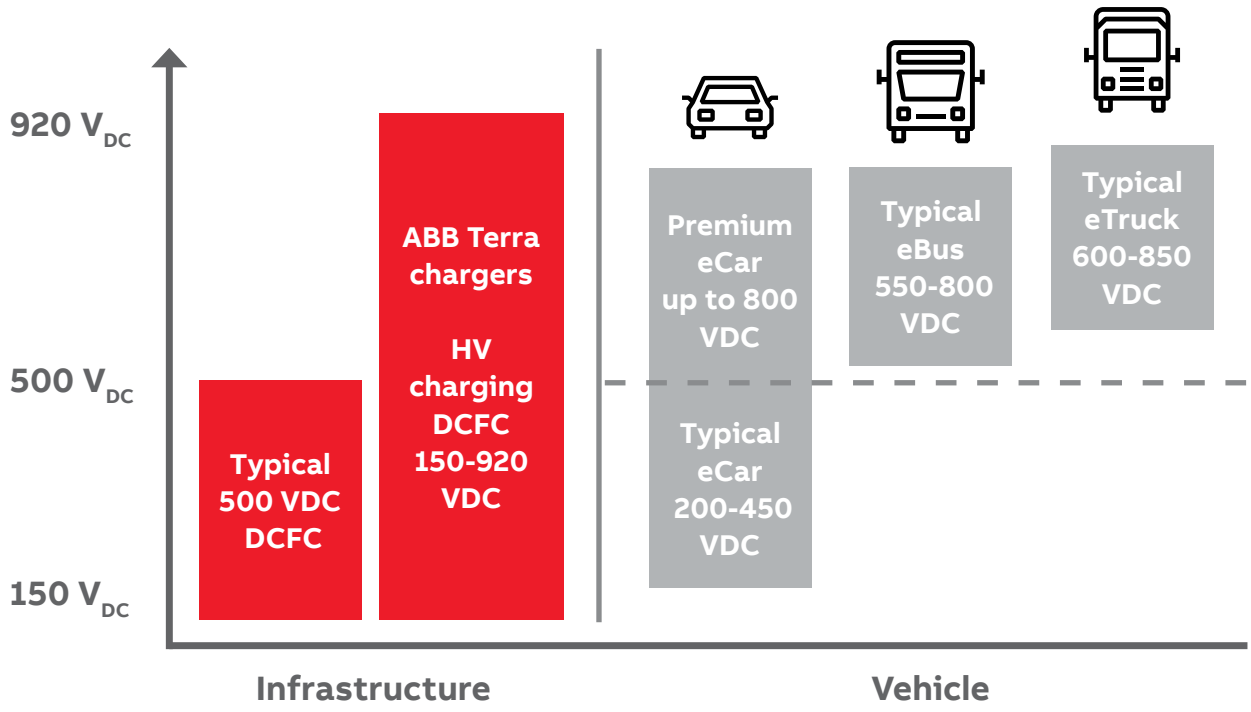


—
A high range of DC voltage capability is demanded to deliver efficient charging service to every EV and use case.

# Terra charging times

## All-in-one charging for every EV

| | | Charging time (minutes) | | | | | |
|---|---|---|---|---|---|---|---|
| | | **50 kW** Terra 54 Terra 54HV | **90 kW** Terra 94 | **120 kW** Terra 124 | | **180 kW** Terra 184 | |
| | | | | 2 EVs | 1 EV | 2 EVs | 1 EV |
| Car | 60 kWh BEV 400 VDC | 50 | 25 | 40 | 20 | 25 | 13 |
| Car | 90 kWh BEV 400 VDC | 70 | 40 | 60 | 30 | 40 | 20 |
| Car | 100 kWh BEV 800 VDC | 80 | 45 | 65 | 33 | 45 | 22 |
| Bus/Truck | 120 kWh BEV School Bus 400 VDC | 95 | 53 | 80 | 40 | 55 | 26 |
| Bus/Truck | 150 kWh BEV Delivery Van 800 VDC | 120 | 65 | 100 | 50 | 65 | 33 |
| Bus/Truck | 200 kWh BEV Work Truck 800 VDC | 160 | 88 | 133 | 66 | 88 | 44 |
| Bus/Truck | 300 kWh BEV 60' Transit Bus 800 VDC | 240 | 130 | 200 | 100 | 130 | 66 |

—
Charge times shown based on average vehicle battery management system (BMS) requesting charging power from 20% to 80% under mild environmental conditions. Data assumes vehicles capable of charging at cited power levels.

# Designed for flexibility

## A configuration for every use case

**Terra 54/94/124/184 C**
Single outlet CCS with cable management system

**Terra 54/94/124/184 CC**
Dual outlet CCS with cable management system

**Terra 54/94/124/184 CJ**
Dual outlet CCS and CHAdeMO with cable management system and credit card reader

**Power levels**
- 50 kW
- 90 kW
- 120 kW / 60 kW shared
- 180 kW / 90 kW shared

**Charging standards**
- CCS+CHAdeMO
- CCS-only single outlet
- CCS-only dual outlet

**Cable management**
- Reliable, tested system
- Factory or field install

**User access / payment**
- OCPP Integration
- Credit card reader
- PIN via Web Tools
- Autocharge/ISO 15118

# Terra DC Fast Chargers
## Technical specification UL

| Specifications | Terra 54 | Terra 94 | Terra 124 | Terra 184 |
|---|---|---|---|---|
| **Electrical** | | | | |
| Output power* | 50 kW continuous | 90 kW continuous | 120 kW or 60 kW x 2 continuous | 180 kW or 90 kW x 2 continuous |
| AC Input voltage | 480Y / 277 VAC +/- 10 % (60 Hz) | | | |
| AC input connection | 3-phase: : L1, L2, L3, GND (no neutral) | | | |
| Nominal input current and input power rating | 64 A, 53.2 kVA Power limiting available | 115 A, 96 kVA Power limiting available | 153 A, 128 kVA Power limiting available | 230 A, 192 kVA Power limiting available |
| Recommended upstream circuit breaker(s) | 80 A | 150 A | 200 A | 300 A |
| Power Factor* | > 0.96 | | | |
| Current THD* | < 5% | | | |
| Short circuit current rating | 65 kA; 10 kA optional | 65 kA | | |
| DC output voltage | CCS-1: 200 - 500 VDC<br>CHAdeMO: 50 - 500 VDC<br>HV version: 200 - 920 VDC | CCS-1: 150 - 920 VDC<br>CHAdeMO: 150 - 500 VDC | | |
| DC output current | 125 A | CCS-1: 200 A; CHAdeMO: 200 A (125 A optional) | | |
| Efficiency* | 95% | | | |
| **Interface and Control** | | | | |
| Charging protocols | CCS1, CCS2 and CHAdeMO 1.2 | | | |
| User interface | 7” high brightness full color touchscreen display | | | |
| RFID system | ISO/IEC 14443A/B, ISO/IEC 15393, FeliCa™ 1, NFC reader mode, Mifare, Calypso, (option: Legic) | | | |
| Network connection | GSM/3G/4G modem; 10/100 Base-T Ethernet | | | |
| Communication | OCPP 1.6 Core and Smart Charging Profiles; Autocharge via OCPP | | | |
| Supported languages | English (others available on request) | | | |
| **Environment** | | | | |
| Operating temperature | -35 °C to +55 °C / -31 °F to +131 °F<br>(de-rating characteristics apply at extreme temperatures) | | | |
| Recommended storage conditions | -10 °C to +70 °C / 14 °F to +158 °C<br>(dry environment) | | | |
| Protection | IP54, NEMA 3R; indoor and outdoor rated | | | |
| Humidity | 5% to 95%, non-condensing | | | |
| Altitude | up to 2000 m (6560 ft) | | | |
| **General** | | | | |
| Charge cable | 6 m (20 ft) standard; 8 m (26 ft) optional | | | |
| Dimensions (H x W x D) | 1900 x 565 x 780 mm<br>74.8 x 22.2 x 30.7 in | 1900 x 565 x 880 mm<br>74.8 x 22.2 x 34.6 in | | |
| Weight | 350 kg / 775 lbs | 350 kg / 775 lbs | 365 kg / 800 lbs | 395 kg / 870 lbs |
| Compliance and safety | UL 2202, CSA No. 107.1-16; UL 2231-1, UL 2231-2, CSA STD C22.2 No. 107.1; NEC Article 625, EN 61851, EN 62196; CHAdeMO 1.2; DIN 70121, ISO 15118; IEC 61000-6-3; EMC Class B, FCC Part 15 | | | |

*Data shown at nominal output power

# Flexible OCPP enablement

## Back-office integrations backed by ABB connectivity

**Network communications**
ABB has integrated with nearly every major charging network around the world for OCPP support across public and fleet charging operations. ABB chargers can be operated using a direct OCPP connection while linking to ABB's advanced diagnostics and firmware update services for additional intelligence, technical support as well as reduced maintenance.

Leading the industry in implementing authentication technologies, ABB enables Autocharge coupled with an OCPP server. This functionality offers access control at the vehicle level, ideal for fleet asset telematics. ABB's software engineers work with the latest standardized protocols in the EV charging industry including roaming platforms, energy management software and next generation authentication solutions.

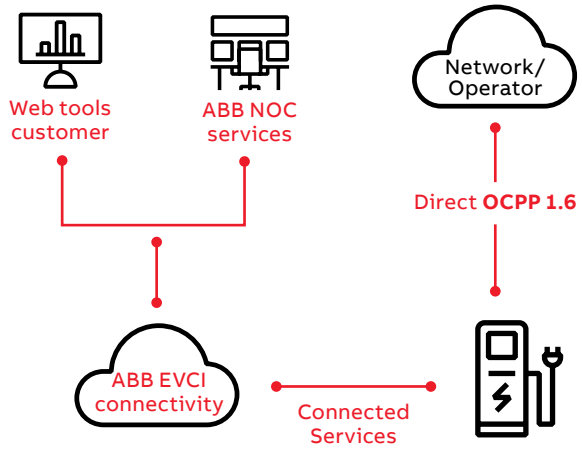


**Better and faster support:** Chargers connected to ABB's network operations center can achieve the fastest remote support from ABB network engineers. This leads to higher uptime of a charger network, minimizes the number of unplanned on-site visits, and significantly reduces overall operational costs.

**Scalability and security:** IT resources can scale in the ABB Ability cloud while connectivity monitoring is supported by ABB around the clock. ABB leverages Microsoft Azure based security with fewer backend connections to monitor.

### OCPP Integrations

The Open Charge Point Protocol (OCPP) includes a broad set of messages with a wide range of functionality for enterprise telematics and usage data. The transaction-based set-up of the messages makes it easy to connect to a back-end system to process charging sessions, define usage models and handle data. Other capabilities include integration with apps and energy management, such as with OCPP Smart Charging Profiles.

### Plug and charge

Eliminating manual authentication methods for drivers while delivering granular data sets to network operators and fleets has never been easier with 'plug and play' charging solutions.

ABB supports Autocharge, in conjunction with an OCPP network integration, to meet vehicle-based authentication demands seamlessly with any CCS vehicle.

Additionally, ABB has proactively enabled ISO 15118 (Plug & Charge) for its charging systems to deliver more advanced plug and play charging experience for the next generation of electric vehicles.

# ABB EV Infrastructure services

## For highest utilization and lowest downtime

**Operational excellence**
Charging infrastructure must be optimized for the highest utilization and lowest downtime. ABB's remote and real-time services meets that demand, incorporating a decade of experience with thousands of intelligent fast chargers deployed across the globe.

ABB's Terra family of all-in-one chargers are the easiest chargers in the market to service, with high uptime due to its innovative modularity, round the clock connectivity and experience-led design.

### Remote services

- 24/7 connectivity
- Remote services
- Remote diagnostics
- Firmware upgrades
- Driver care web tools
- Charger Care web tools

### Parts and warranty services

- Full service warranty process
- Extended warranties
- Preventive service and maintenance
- Network spare parts programs
- Fleet spare parts programs

### Custom software services

- OCPP integration
- Autocharge integration testing
- Interoperability testing and validation
- Customized enterprise software support

### Training

- Standardized online training
- Customized service training
- Third-party service training programs


—
**ABB Inc.**
950 W Elliott Road, Suite 101
Tempe, AZ,  85284
United States
Phone:  800-435-7365
E-mail:  US-evci@us.abb.com

—
**ABB Inc.**
800 Hymus Boulevard
Saint-Laurent, QC H4S 0B5
Canada
Phone: 800-435-7365
E-mail: CA-evci@abb.com


**abb.com/evcharging**




9AKK107991A4246